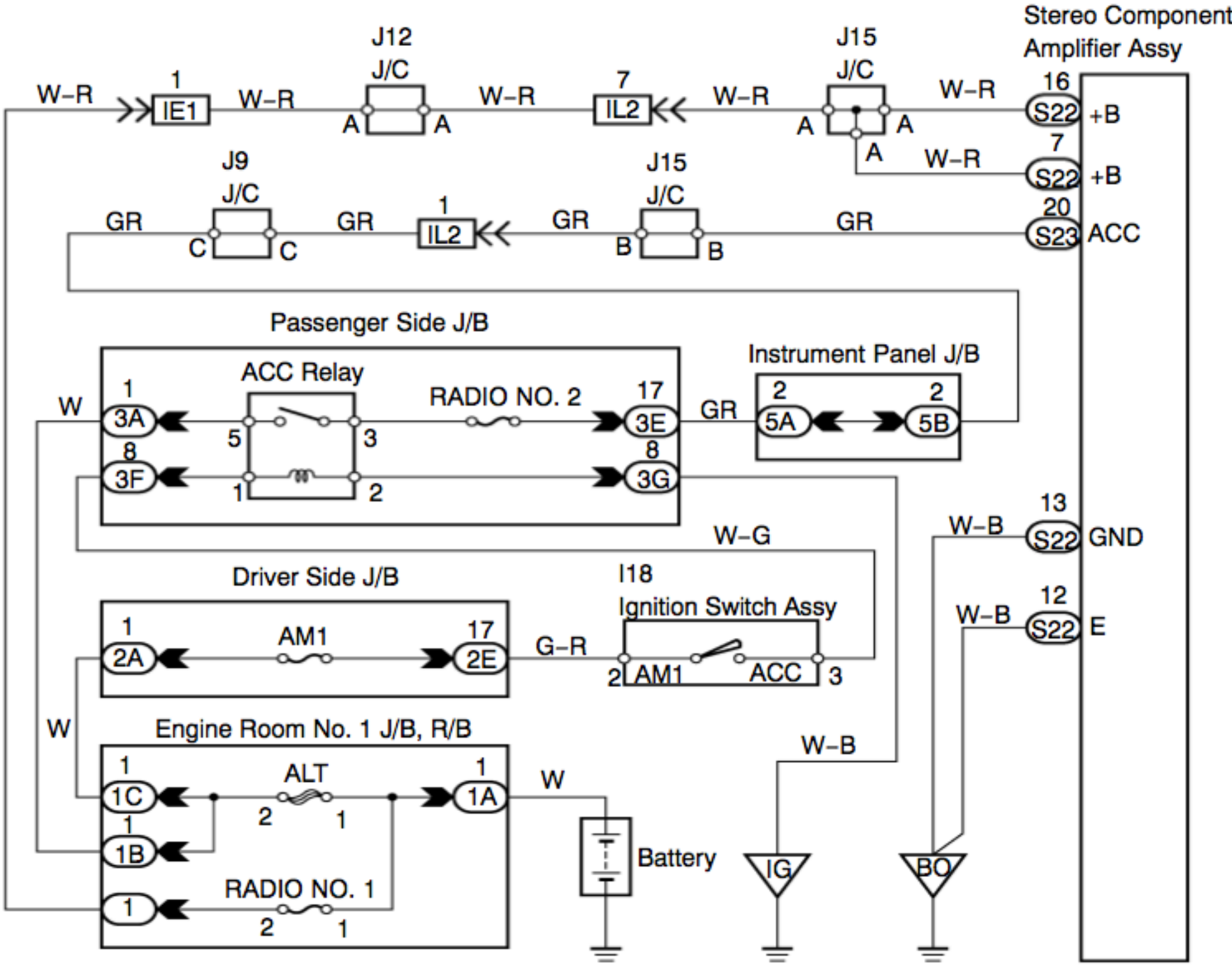
Stereo Component Amplifier Assy
W-R
1
IE1
W-R
J12
J/C
A
A
W-R
7
IL2
W-R
J15
J/C
A
A
A
W-R
16
S22
+B
W-R
7
S22
+B
J9
J/C
GR
C
C
GR
1
IL2
GR
J15
J/C
B
B
GR
20
S23
ACC
Passenger Side J/B
ACC Relay
W
1
3A
8
3F
5
3
1
2
RADIO NO. 2
17
3E
8
3G
GR
Instrument Panel J/B
2
5A
2
5B
W-G
13
W-B
S22
GND
Driver Side J/B
1
2A
AM1
17
2E
G-R
I18
Ignition Switch Assy
2
AM1
ACC
3
12
W-B
S22
E
W
Engine Room No. 1 J/B, R/B
1
1C
1
1B
1
ALT
2
1
1
1A
W
1
RADIO NO. 1
2
1
Battery
W-B
IG
BO

N