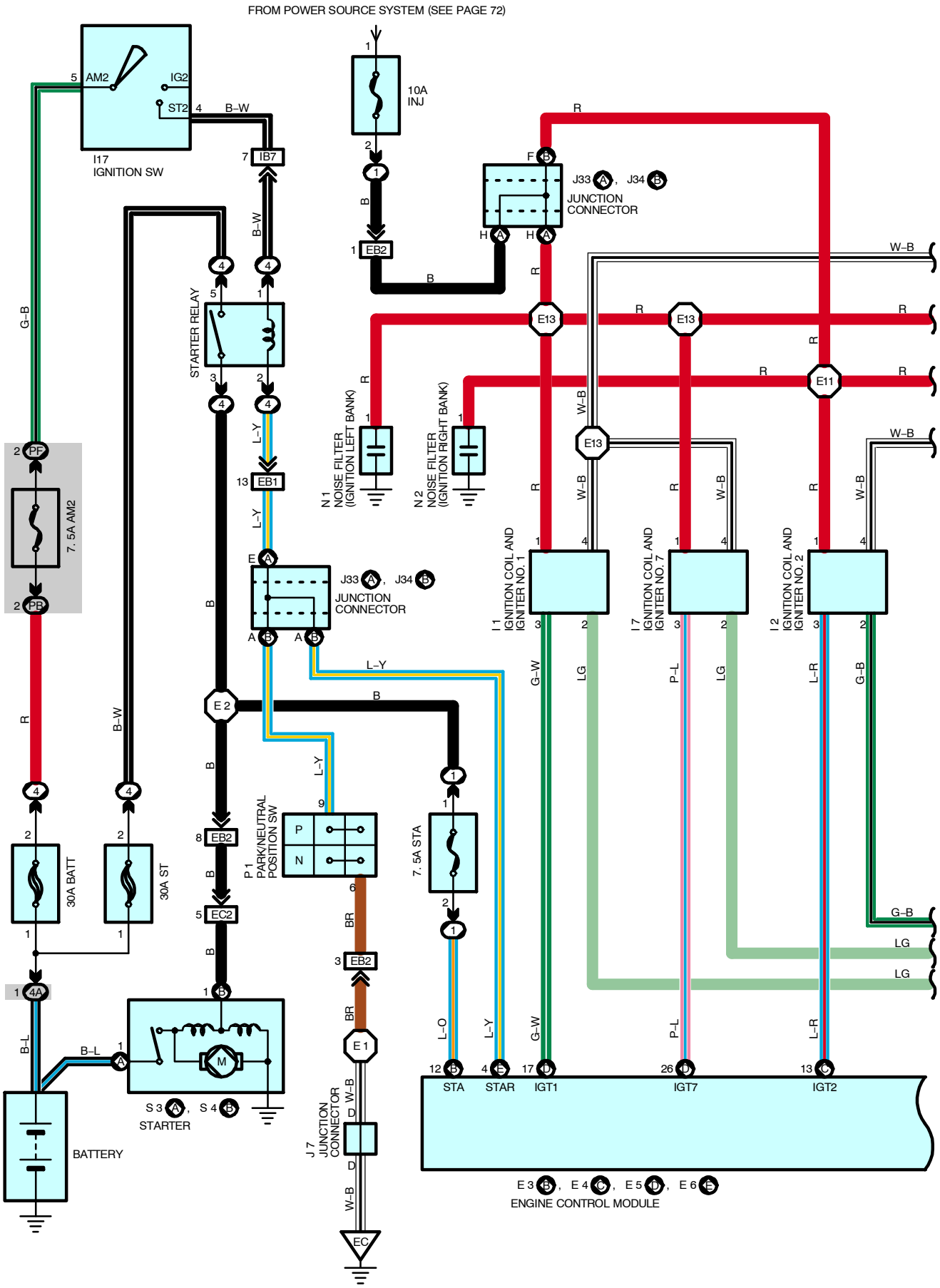
FROM POWER SOURCE SYSTEM (SEE PAGE 72)
I17
IGNITION SW
AM2
IG2
ST2
B–W
IB7
10A
INJ
EB2
J33 A, J34 B
JUNCTION
CONNECTOR
E13
E11
W–B
STARTER RELAY
N 1
NOISE FILTER
(IGNITION LEFT BANK)
N 2
NOISE FILTER
(IGNITION RIGHT BANK)
EB1
L–Y
E 2
PF
PB
7. 5A AM2
30A BATT
30A ST
4A
B–L
BATTERY
S 3 A, S 4 B
STARTER
P 1
PARK/NEUTRAL
POSITION SW
P
N
EC2
BR
E 1
J 7
JUNCTION
CONNECTOR
EC
7. 5A STA
I 1
IGNITION COIL AND
IGNITER NO. 1
I 7
IGNITION COIL AND
IGNITER NO. 7
I 2
IGNITION COIL AND
IGNITER NO. 2
G–W
LG
P–L
L–R
G–B
L–O
STA
STAR
IGT1
IGT7
IGT2
E 3 B, E 4 C, E 5 D, E 6 E
ENGINE CONTROL MODULE

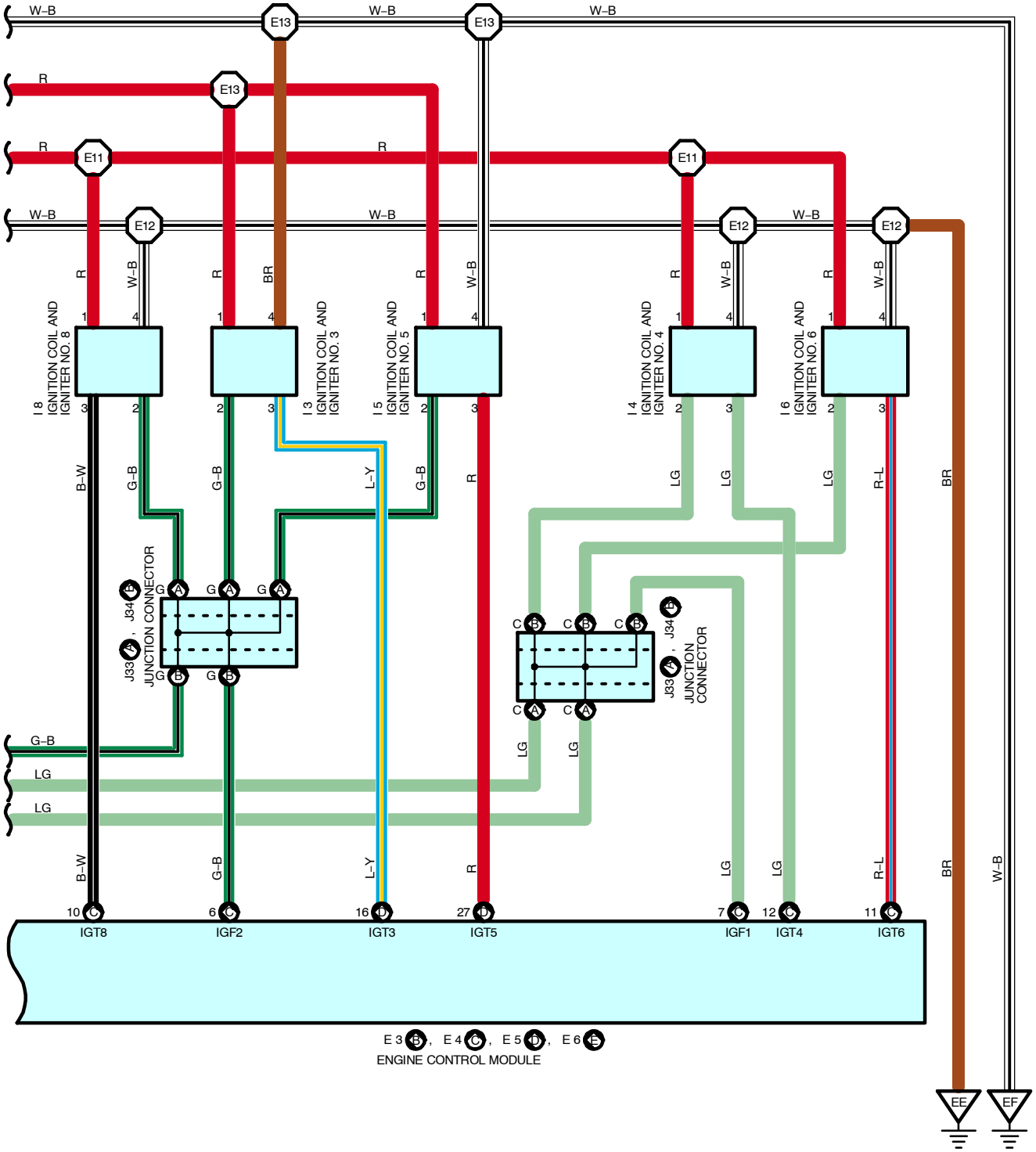
W–B
E13
W–B
E13
W–B
R
E13
R
E11
R
E11
W–B
E12
W–B
E12
W–B
E12
R
W–B
R
BR
R
W–B
R
W–B
R
W–B
I 8
IGNITION COIL AND
IGNITER NO. 8
I 3
IGNITION COIL AND
IGNITER NO. 3
I 5
IGNITION COIL AND
IGNITER NO. 5
I 4
IGNITION COIL AND
IGNITER NO. 4
I 6
IGNITION COIL AND
IGNITER NO. 6
B–W
G–B
G–B
L–Y
G–B
R
LG
LG
LG
R–L
BR
J34
J33
JUNCTION CONNECTOR
J34
J33
JUNCTION
CONNECTOR
G–B
LG
LG
LG
LG
B–W
G–B
L–Y
R
LG
LG
R–L
BR
W–B
10
IGT8
6
IGF2
16
IGT3
27
IGT5
7
IGF1
12
IGT4
11
IGT6
E3, E4, E5, E6
ENGINE CONTROL MODULE
EE
EF