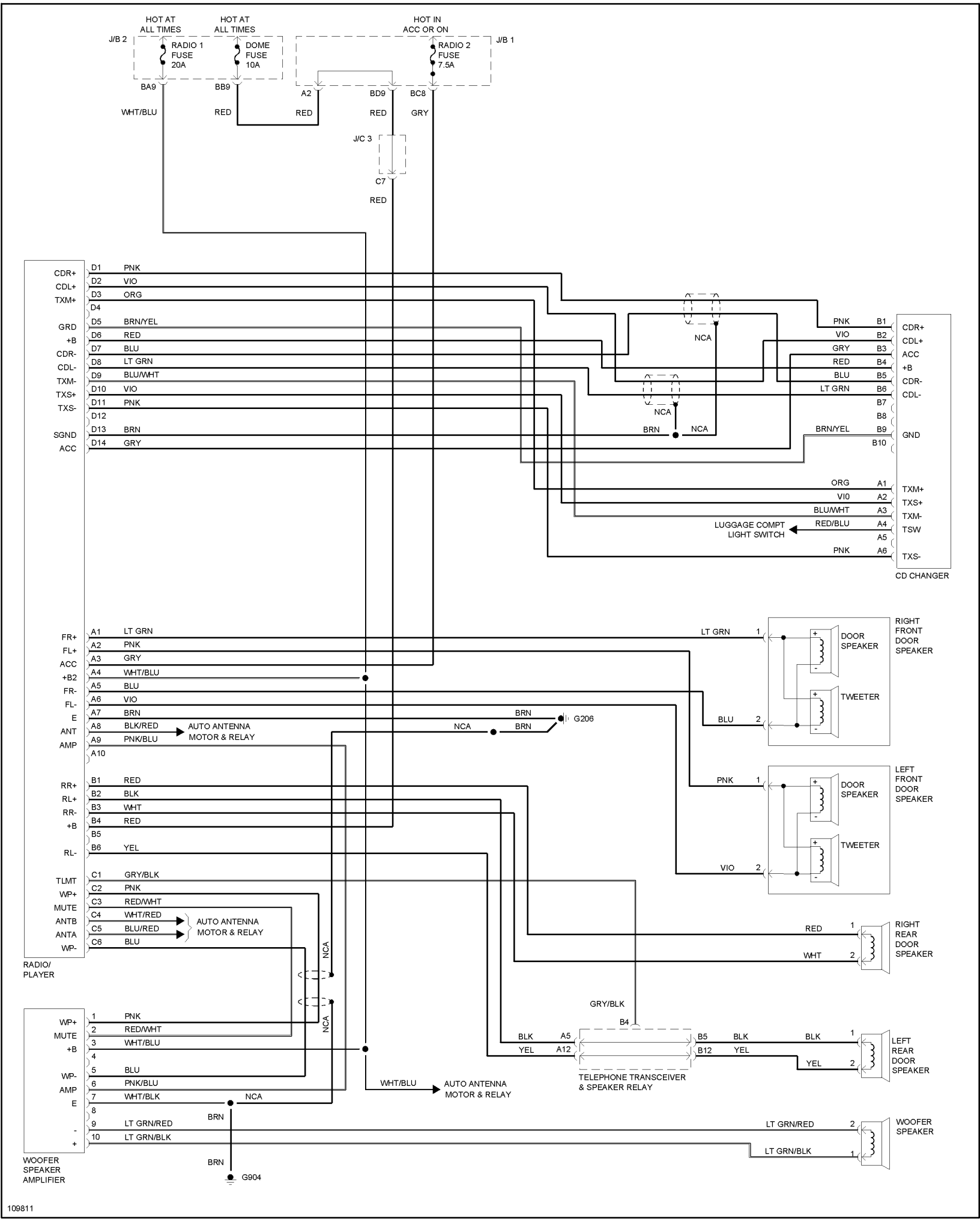
HOT AT ALL TIMES
HOT AT ALL TIMES
HOT IN ACC OR ON
J/B 2
RADIO 1 FUSE 20A
DOME FUSE 10A
RADIO 2 FUSE 7.5A
J/B 1
BA9
BB9
A2
BD9
BC8
WHT/BLU
RED
RED
RED
GRY
J/C 3
C7
RED
CDR+
CDL+
TXM+
GRD
+B
CDR-
CDL-
TXM-
TXS+
TXS-
SGND
ACC
D1 PNK
D2 VIO
D3 ORG
D4
D5 BRN/YEL
D6 RED
D7 BLU
D8 LT GRN
D9 BLU/WHT
D10 VIO
D11 PNK
D12
D13 BRN
D14 GRY
NCA
NCA
BRN
NCA
PNK B1
VIO B2
GRY B3
RED B4
BLU B5
LT GRN B6
B7
B8
BRN/YEL B9
B10
CDR+
CDL+
ACC
+B
CDR-
CDL-
GND
ORG A1
VI0 A2
BLU/WHT A3
RED/BLU A4
A5
PNK A6
TXM+
TXS+
TXM-
TSW
TXS-
LUGGAGE COMPT LIGHT SWITCH
CD CHANGER
FR+
FL+
ACC
+B2
FR-
FL-
E
ANT
AMP
A1 LT GRN
A2 PNK
A3 GRY
A4 WHT/BLU
A5 BLU
A6 VIO
A7 BRN
A8 BLK/RED
A9 PNK/BLU
A10
AUTO ANTENNA MOTOR & RELAY
BRN
NCA
BRN
G206
LT GRN 1
BLU 2
DOOR SPEAKER
TWEETER
RIGHT FRONT DOOR SPEAKER
RR+
RL+
RR-
+B
RL-
B1 RED
B2 BLK
B3 WHT
B4 RED
B5
B6 YEL
PNK 1
VIO 2
DOOR SPEAKER
TWEETER
LEFT FRONT DOOR SPEAKER
TLMT
WP+
MUTE
ANTB
ANTA
WP-
C1 GRY/BLK
C2 PNK
C3 RED/WHT
C4 WHT/RED
C5 BLU/RED
C6 BLU
AUTO ANTENNA MOTOR & RELAY
RADIO/ PLAYER
NCA
NCA
RED 1
WHT 2
RIGHT REAR DOOR SPEAKER
WP+
MUTE
+B
WP-
AMP
E
-
+
1 PNK
2 RED/WHT
3 WHT/BLU
4
5 BLU
6 PNK/BLU
7 WHT/BLK
8
9 LT GRN/RED
10 LT GRN/BLK
NCA
NCA
BRN
BRN
G904
WOOFER SPEAKER AMPLIFIER
WHT/BLU
AUTO ANTENNA MOTOR & RELAY
GRY/BLK
B4
BLK A5
YEL A12
B5 BLK
B12 YEL
TELEPHONE TRANSCEIVER & SPEAKER RELAY
BLK 1
YEL 2
LEFT REAR DOOR SPEAKER
LT GRN/RED 2
LT GRN/BLK 1
WOOFER SPEAKER
109811