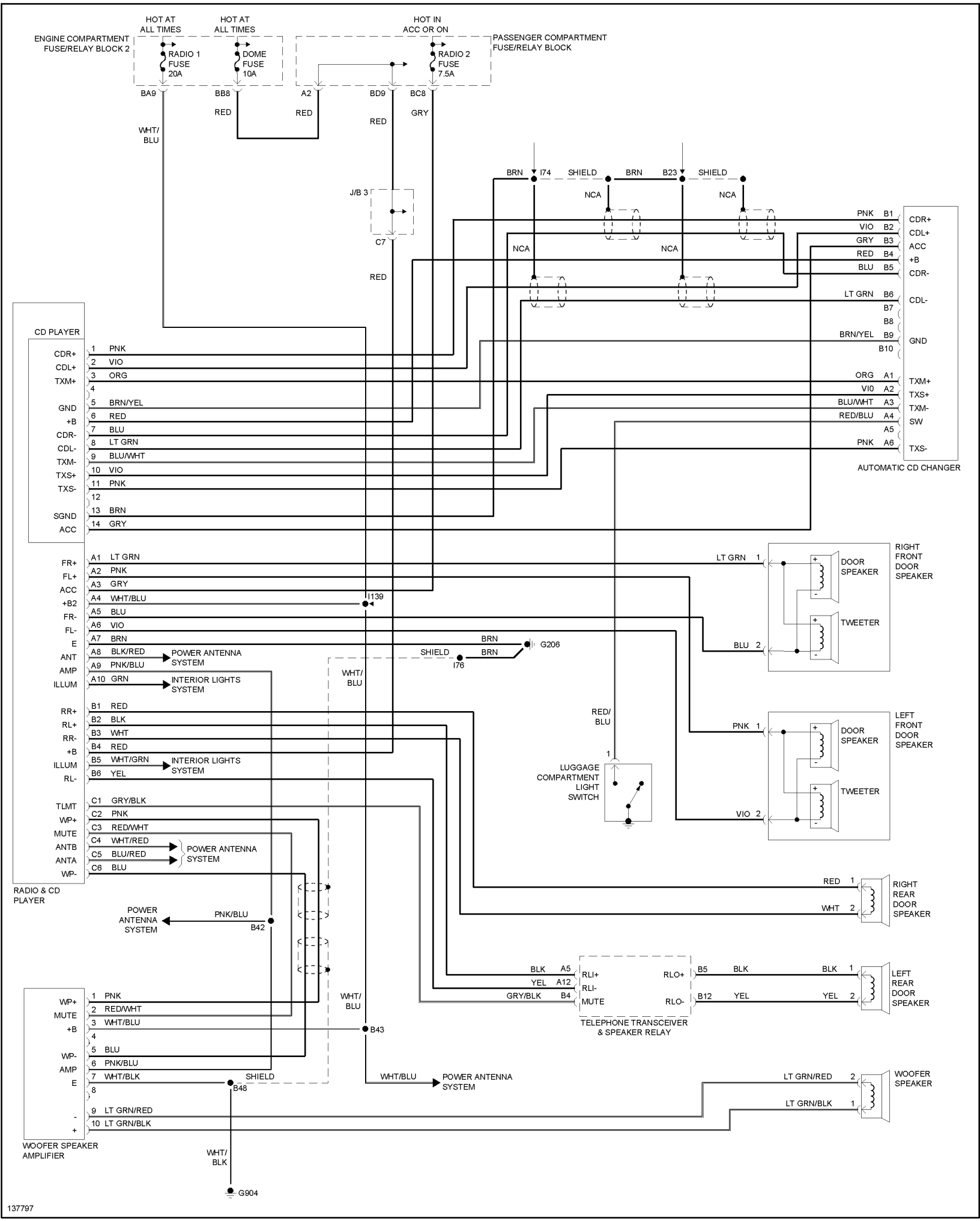
HOT AT ALL TIMES
HOT AT ALL TIMES
HOT IN ACC OR ON
ENGINE COMPARTMENT FUSE/RELAY BLOCK 2
RADIO 1 FUSE 20A
DOME FUSE 10A
RADIO 2 FUSE 7.5A
PASSENGER COMPARTMENT FUSE/RELAY BLOCK
BA9
BB8
A2
BD9
BC8
RED
RED
RED
GRY
WHT/BLU
J/B 3
C7
RED
BRN
I74
SHIELD
BRN
B23
SHIELD
NCA
NCA
NCA
NCA
CD PLAYER
CDR+
CDL+
TXM+
GND
+B
CDR-
CDL-
TXM-
TXS+
TXS-
SGND
ACC
1 PNK
2 VIO
3 ORG
4
5 BRN/YEL
6 RED
7 BLU
8 LT GRN
9 BLU/WHT
10 VIO
11 PNK
12
13 BRN
14 GRY
PNK B1 CDR+
VIO B2 CDL+
GRY B3 ACC
RED B4 +B
BLU B5 CDR-
LT GRN B6 CDL-
B7
B8
BRN/YEL B9 GND
B10
ORG A1 TXM+
VI0 A2 TXS+
BLU/WHT A3 TXM-
RED/BLU A4 SW
A5
PNK A6 TXS-
AUTOMATIC CD CHANGER
FR+
FL+
ACC
+B2
FR-
FL-
E
ANT
AMP
ILLUM
A1 LT GRN
A2 PNK
A3 GRY
A4 WHT/BLU
A5 BLU
A6 VIO
A7 BRN
A8 BLK/RED
A9 PNK/BLU
A10 GRN
POWER ANTENNA SYSTEM
INTERIOR LIGHTS SYSTEM
I139
BRN
SHIELD
BRN
G206
I76
WHT/BLU
LT GRN 1
BLU 2
DOOR SPEAKER
TWEETER
RIGHT FRONT DOOR SPEAKER
RR+
RL+
RR-
+B
ILLUM
RL-
B1 RED
B2 BLK
B3 WHT
B4 RED
B5 WHT/GRN
B6 YEL
INTERIOR LIGHTS SYSTEM
RED/BLU
1
LUGGAGE COMPARTMENT LIGHT SWITCH
PNK 1
VIO 2
DOOR SPEAKER
TWEETER
LEFT FRONT DOOR SPEAKER
TLMT
WP+
MUTE
ANTB
ANTA
WP-
C1 GRY/BLK
C2 PNK
C3 RED/WHT
C4 WHT/RED
C5 BLU/RED
C6 BLU
POWER ANTENNA SYSTEM
RADIO & CD PLAYER
RED 1
WHT 2
RIGHT REAR DOOR SPEAKER
POWER ANTENNA SYSTEM
PNK/BLU
B42
BLK A5 RLI+
YEL A12 RLI-
GRY/BLK B4 MUTE
RLO+ B5 BLK
RLO- B12 YEL
BLK 1
YEL 2
LEFT REAR DOOR SPEAKER
TELEPHONE TRANSCEIVER & SPEAKER RELAY
WP+
MUTE
+B
WP-
AMP
E
-
+
1 PNK
2 RED/WHT
3 WHT/BLU
4
5 BLU
6 PNK/BLU
7 WHT/BLK
8
9 LT GRN/RED
10 LT GRN/BLK
WHT/BLU
B43
SHIELD
B48
WHT/BLU
POWER ANTENNA SYSTEM
LT GRN/RED 2
LT GRN/BLK 1
WOOFER SPEAKER
WOOFER SPEAKER AMPLIFIER
WHT/BLK
G904
137797