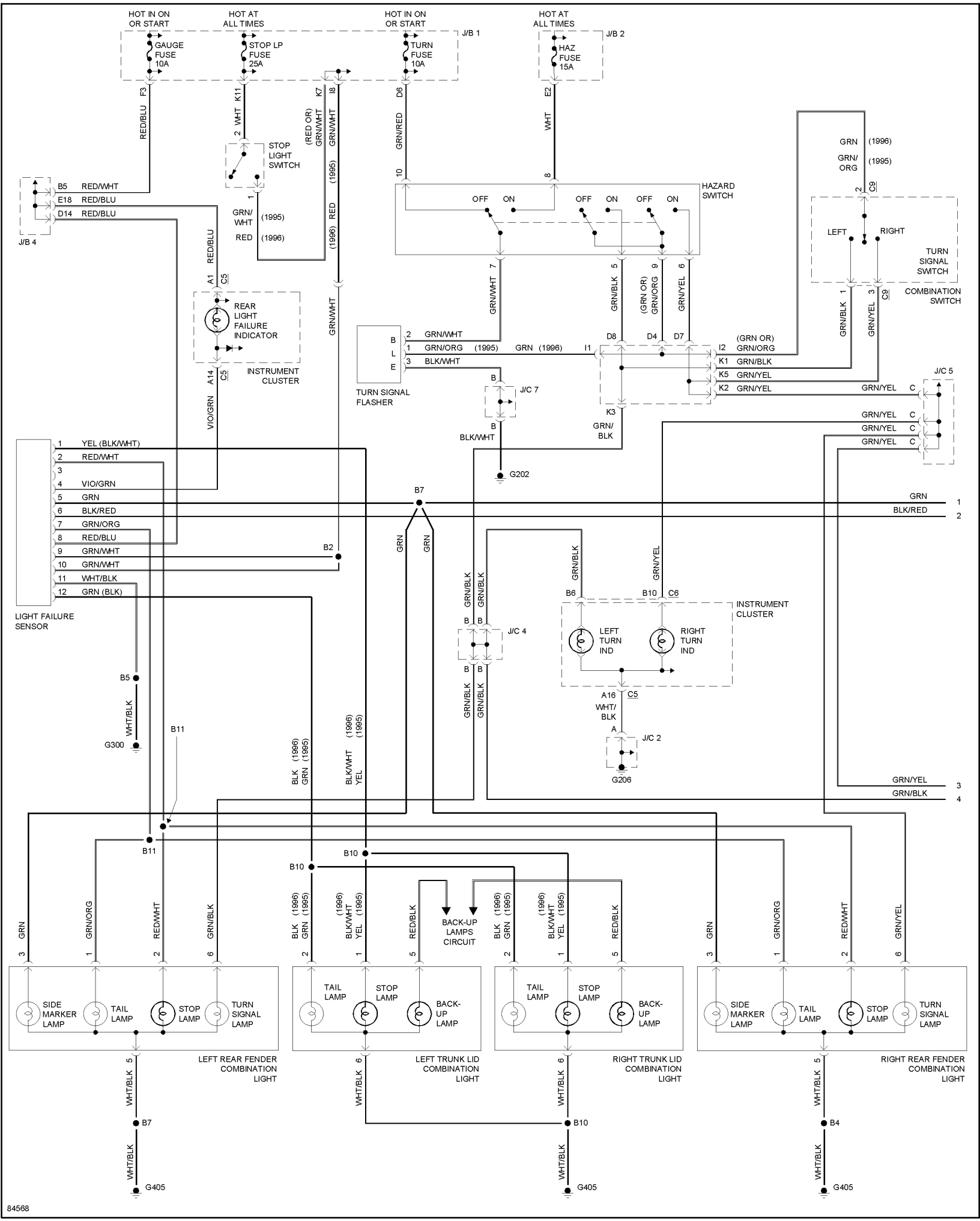
HOT IN ON OR START
HOT AT ALL TIMES
HOT IN ON OR START
HOT AT ALL TIMES
J/B 1
J/B 2
GAUGE FUSE 10A
STOP LP FUSE 25A
TURN FUSE 10A
HAZ FUSE 15A
STOP LIGHT SWITCH
HAZARD SWITCH
OFF ON
TURN SIGNAL SWITCH
LEFT
RIGHT
COMBINATION SWITCH
J/B 4
B5 RED/WHT
E18 RED/BLU
D14 RED/BLU
REAR LIGHT FAILURE INDICATOR
INSTRUMENT CLUSTER
TURN SIGNAL FLASHER
B L E
J/C 7
J/C 5
J/C 4
J/C 2
G202
G300
G206
G405
LIGHT FAILURE SENSOR
1 YEL (BLK/WHT)
2 RED/WHT
3
4 VIO/GRN
5 GRN
6 BLK/RED
7 GRN/ORG
8 RED/BLU
9 GRN/WHT
10 GRN/WHT
11 WHT/BLK
12 GRN (BLK)
B7
B2
B11
B10
B4
LEFT TURN IND
RIGHT TURN IND
BACK-UP LAMPS CIRCUIT
SIDE MARKER LAMP
TAIL LAMP
STOP LAMP
TURN SIGNAL LAMP
BACK-UP LAMP
LEFT REAR FENDER COMBINATION LIGHT
LEFT TRUNK LID COMBINATION LIGHT
RIGHT TRUNK LID COMBINATION LIGHT
RIGHT REAR FENDER COMBINATION LIGHT
84568