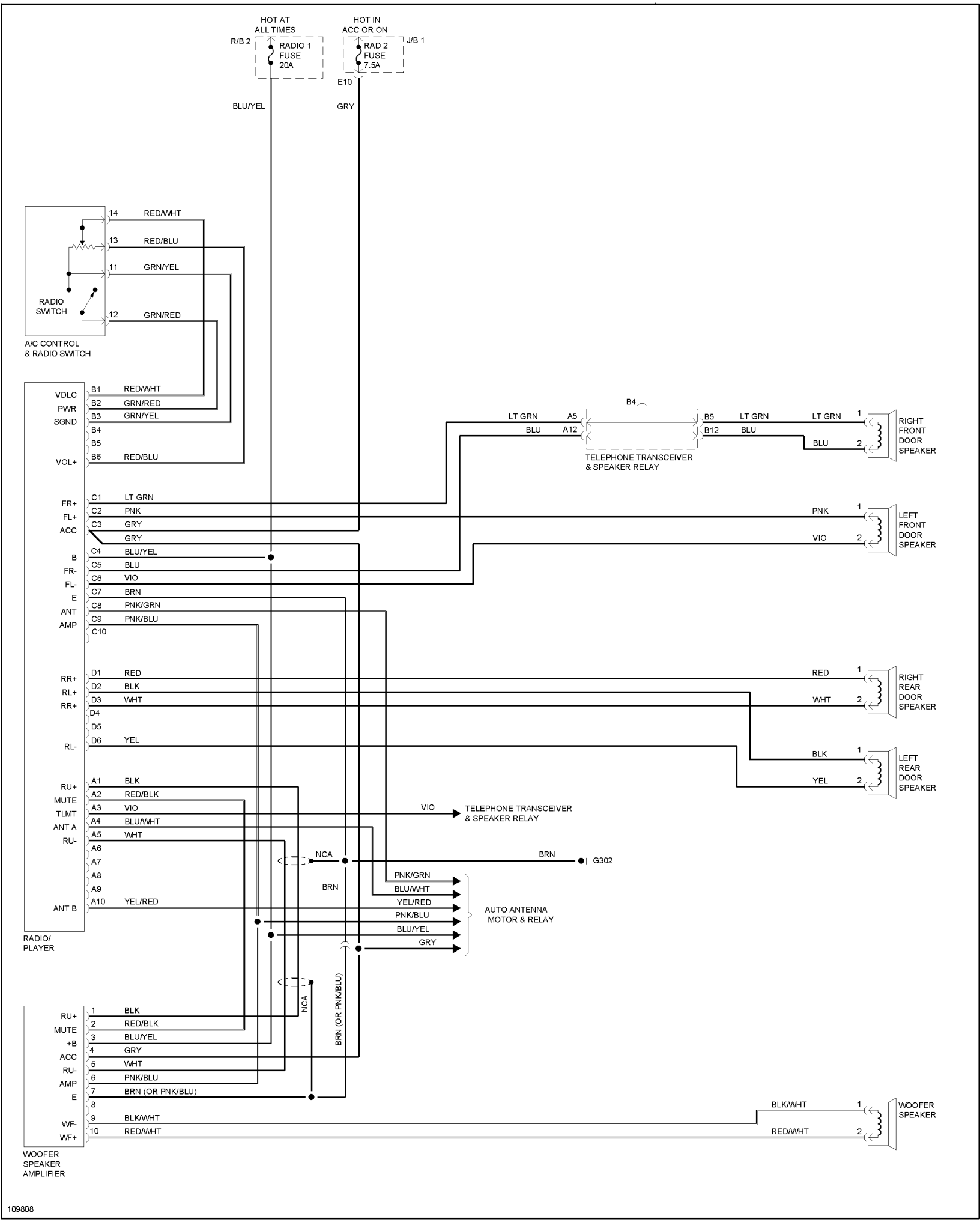
HOT AT ALL TIMES
R/B 2
RADIO 1 FUSE 20A
HOT IN ACC OR ON
RAD 2 FUSE 7.5A
J/B 1
E10
BLU/YEL
GRY
A/C CONTROL & RADIO SWITCH
RADIO SWITCH
14 RED/WHT
13 RED/BLU
11 GRN/YEL
12 GRN/RED
RADIO/ PLAYER
VDLC B1 RED/WHT
PWR B2 GRN/RED
SGND B3 GRN/YEL
B4
B5
VOL+ B6 RED/BLU
FR+ C1 LT GRN
FL+ C2 PNK
ACC C3 GRY
GRY
B C4 BLU/YEL
FR- C5 BLU
FL- C6 VIO
E C7 BRN
ANT C8 PNK/GRN
AMP C9 PNK/BLU
C10
RR+ D1 RED
RL+ D2 BLK
RR+ D3 WHT
D4
D5
RL- D6 YEL
RU+ A1 BLK
MUTE A2 RED/BLK
TLMT A3 VIO
ANT A A4 BLU/WHT
RU- A5 WHT
A6
A7
A8
A9
ANT B A10 YEL/RED
B4
LT GRN A5
BLU A12
B5 LT GRN
B12 BLU
TELEPHONE TRANSCEIVER & SPEAKER RELAY
LT GRN 1
BLU 2
RIGHT FRONT DOOR SPEAKER
PNK 1
VIO 2
LEFT FRONT DOOR SPEAKER
RED 1
WHT 2
RIGHT REAR DOOR SPEAKER
BLK 1
YEL 2
LEFT REAR DOOR SPEAKER
VIO
TELEPHONE TRANSCEIVER & SPEAKER RELAY
NCA
BRN
G302
PNK/GRN
BLU/WHT
YEL/RED
PNK/BLU
BLU/YEL
GRY
AUTO ANTENNA MOTOR & RELAY
BRN (OR PNK/BLU)
WOOFER SPEAKER AMPLIFIER
RU+ 1 BLK
MUTE 2 RED/BLK
+B 3 BLU/YEL
ACC 4 GRY
RU- 5 WHT
AMP 6 PNK/BLU
E 7 BRN (OR PNK/BLU)
8
WF- 9 BLK/WHT
WF+ 10 RED/WHT
BLK/WHT 1
RED/WHT 2
WOOFER SPEAKER
109808