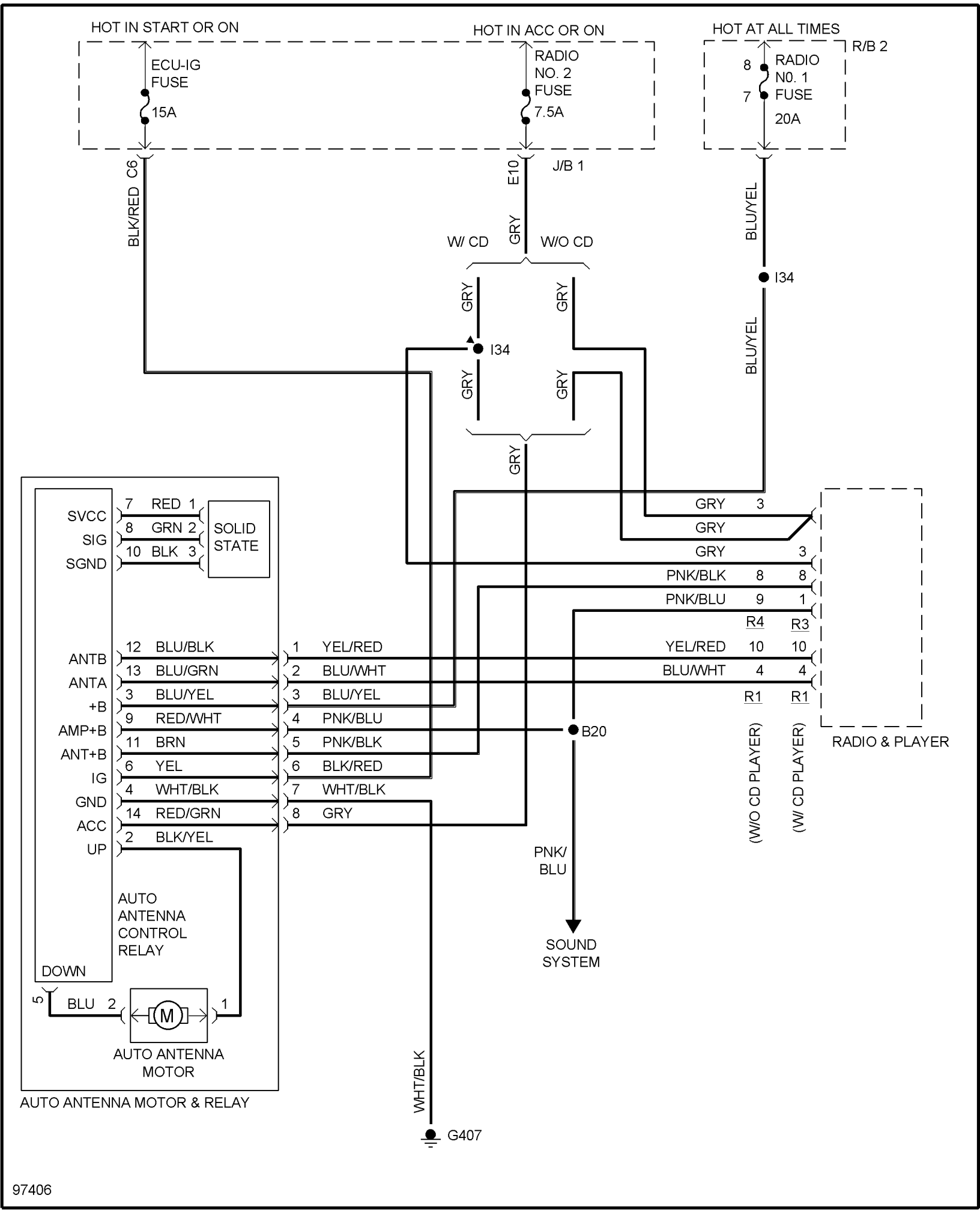
HOT IN START OR ON
HOT IN ACC OR ON
HOT AT ALL TIMES
ECU-IG FUSE
15A
RADIO NO. 2 FUSE
7.5A
RADIO N0. 1 FUSE
20A
R/B 2
8
7
C6
BLK/RED
E10
J/B 1
GRY
W/ CD
W/O CD
BLU/YEL
I34
SVCC
SIG
SGND
7 RED 1
8 GRN 2
10 BLK 3
SOLID STATE
ANTB
ANTA
+B
AMP+B
ANT+B
IG
GND
ACC
UP
12 BLU/BLK
13 BLU/GRN
3 BLU/YEL
9 RED/WHT
11 BRN
6 YEL
4 WHT/BLK
14 RED/GRN
2 BLK/YEL
1 YEL/RED
2 BLU/WHT
3 BLU/YEL
4 PNK/BLU
5 PNK/BLK
6 BLK/RED
7 WHT/BLK
8 GRY
GRY 3
GRY
GRY 3
PNK/BLK 8 8
PNK/BLU 9 1
R4 R3
YEL/RED 10 10
BLU/WHT 4 4
R1 R1
(W/O CD PLAYER)
(W/ CD PLAYER)
RADIO & PLAYER
B20
PNK/ BLU
SOUND SYSTEM
AUTO ANTENNA CONTROL RELAY
DOWN
5
BLU 2
1
M
AUTO ANTENNA MOTOR
AUTO ANTENNA MOTOR & RELAY
WHT/BLK
G407
97406