STARTER

COMPONENTS

ST04Y-04

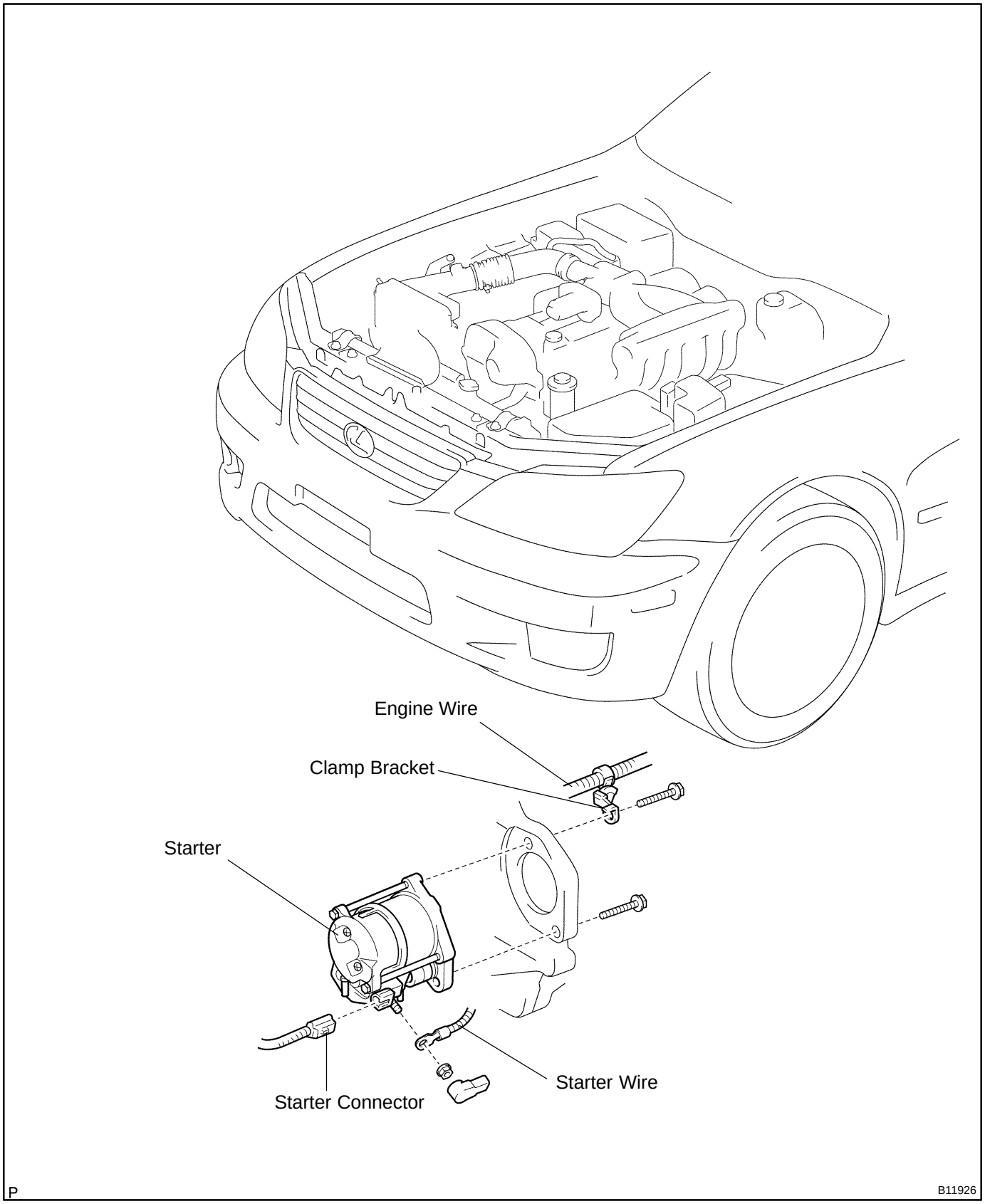

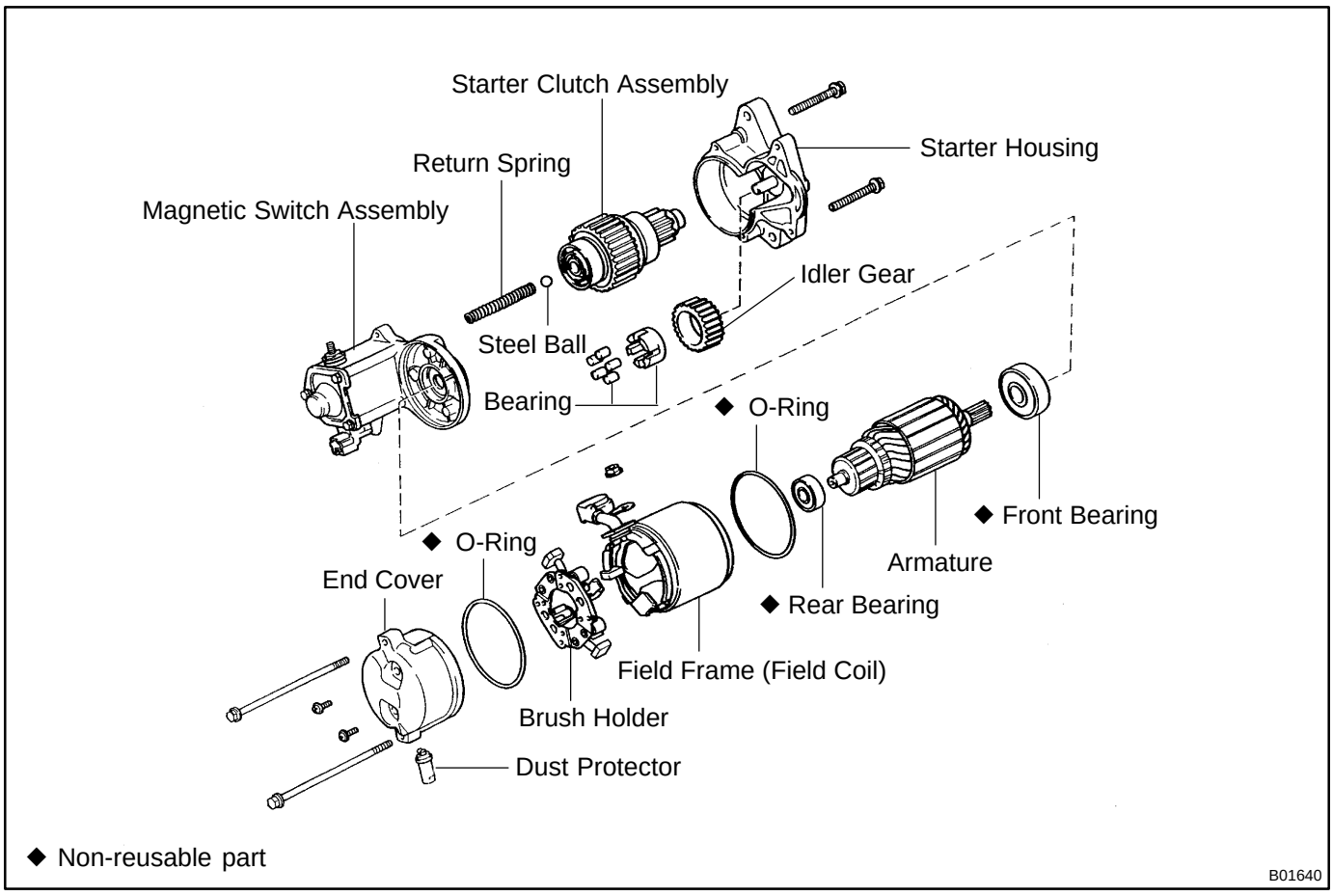
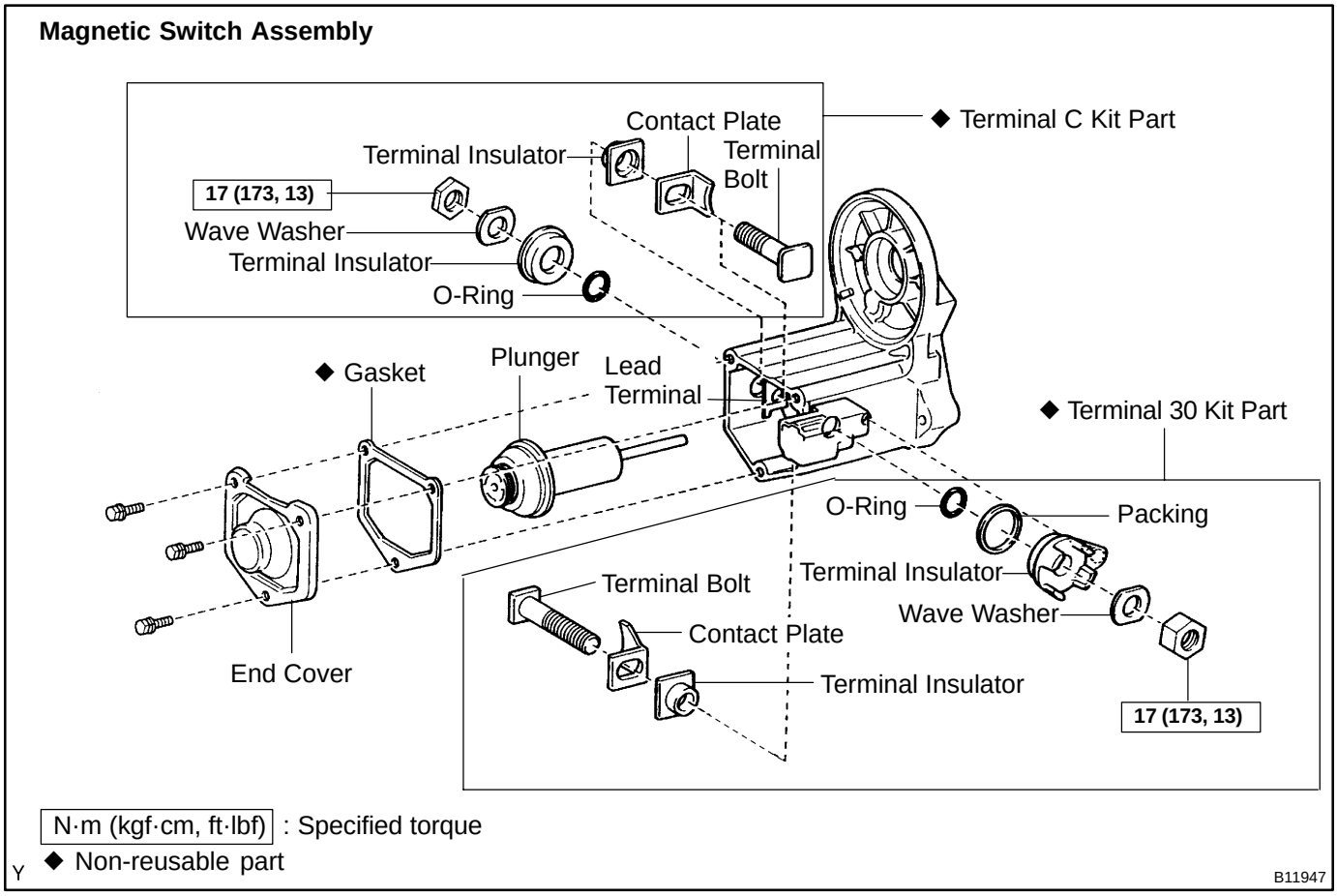
Magnetic Switch Assembly