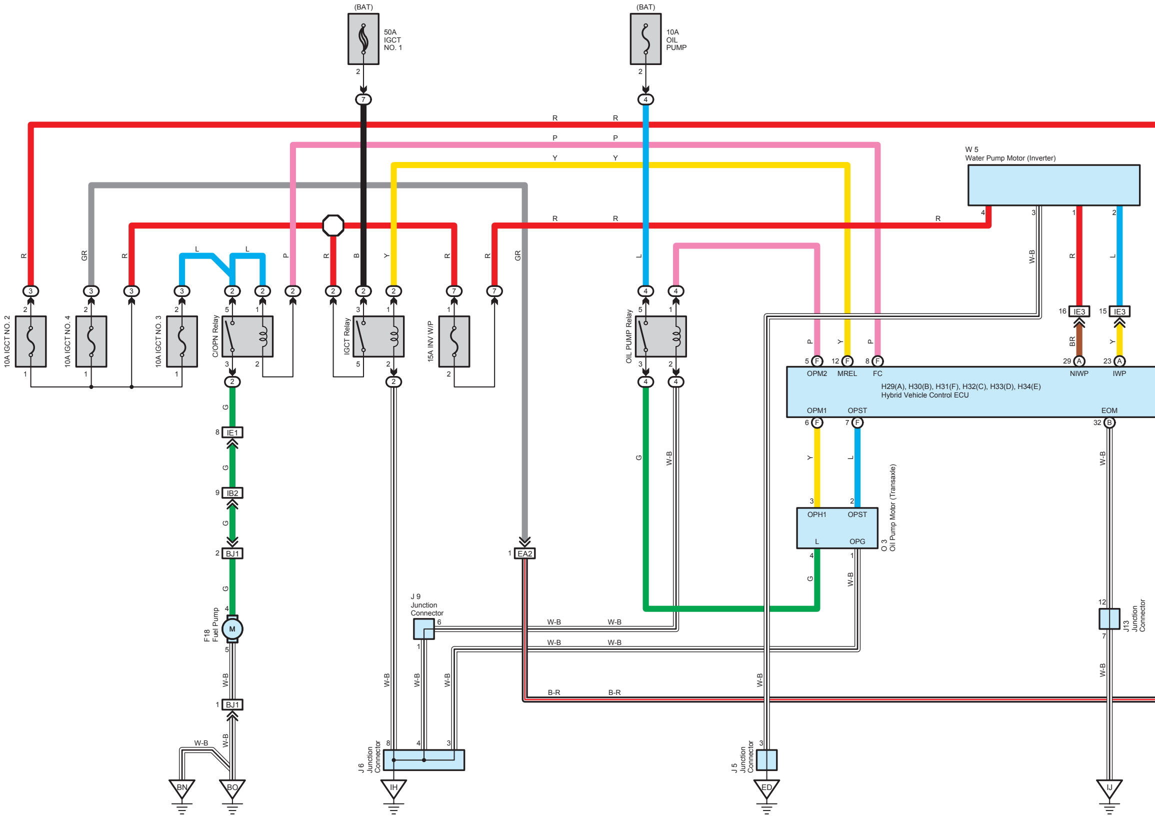
(BAT)
50A
IGCT
NO. 1
(BAT)
10A
OIL
PUMP
W 5
Water Pump Motor (Inverter)
10A IGCT NO. 2
10A IGCT NO. 4
10A IGCT NO. 3
C/OPN Relay
IGCT Relay
15A INV W/P
OIL PUMP Relay
OPM2
MREL
FC
NIWP
IWP
H29(A), H30(B), H31(F), H32(C), H33(D), H34(E)
Hybrid Vehicle Control ECU
OPM1
OPST
EOM
OPH1
OPST
L
OPG
O 3
Oil Pump Motor (Transaxle)
IE1
IB2
BJ1
BJ1
EA2
IE3
IE3
F18
Fuel Pump
M
J 9
Junction
Connector
J 6
Junction
Connector
J 5
Junction
Connector
J13
Junction
Connector
BN
BO
IH
ED
IJ
R
P
Y
GR
L
B
G
W-B
B-R
BR

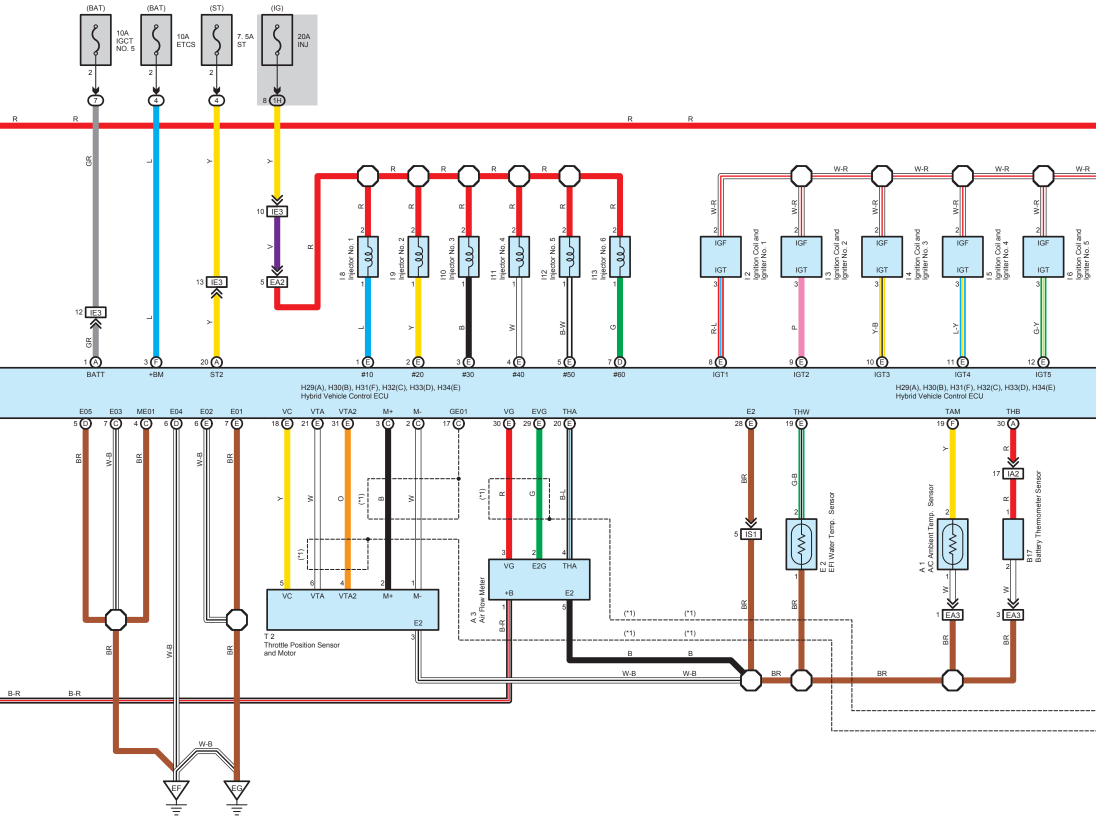
(BAT)
10A IGCT NO. 5
(BAT)
10A ETCS
(ST)
7. 5A ST
(IG)
20A INJ
R
GR
L
Y
IE3
V
EA2
I 8 Injector No. 1
I 9 Injector No. 2
I 10 Injector No. 3
I 11 Injector No. 4
I 12 Injector No. 5
I 13 Injector No. 6
W-R
IGF
IGT
I 2 Ignition Coil and Igniter No. 1
I 3 Ignition Coil and Igniter No. 2
I 4 Ignition Coil and Igniter No. 3
I 5 Ignition Coil and Igniter No. 4
I 6 Ignition Coil and Igniter No. 5
R-L
P
Y-B
L-Y
G-Y
B
W
B-W
G
BATT
+BM
ST2
#10
#20
#30
#40
#50
#60
IGT1
IGT2
IGT3
IGT4
IGT5
H29(A), H30(B), H31(F), H32(C), H33(D), H34(E)
Hybrid Vehicle Control ECU
E05
E03
ME01
E04
E02
E01
VC
VTA
VTA2
M+
M-
GE01
VG
EVG
THA
E2
THW
TAM
THB
BR
W-B
O
(*1)
B-L
IS1
G-B
E 2 EFI Water Temp. Sensor
A 1 A/C Ambient Temp. Sensor
IA2
B17 Battery Thermometer Sensor
EA3
VC
VTA
VTA2
M+
M-
E2
T 2 Throttle Position Sensor and Motor
VG
E2G
THA
+B
E2
A 3 Air Flow Meter
B-R
EF
EG

* 1 : Shielded

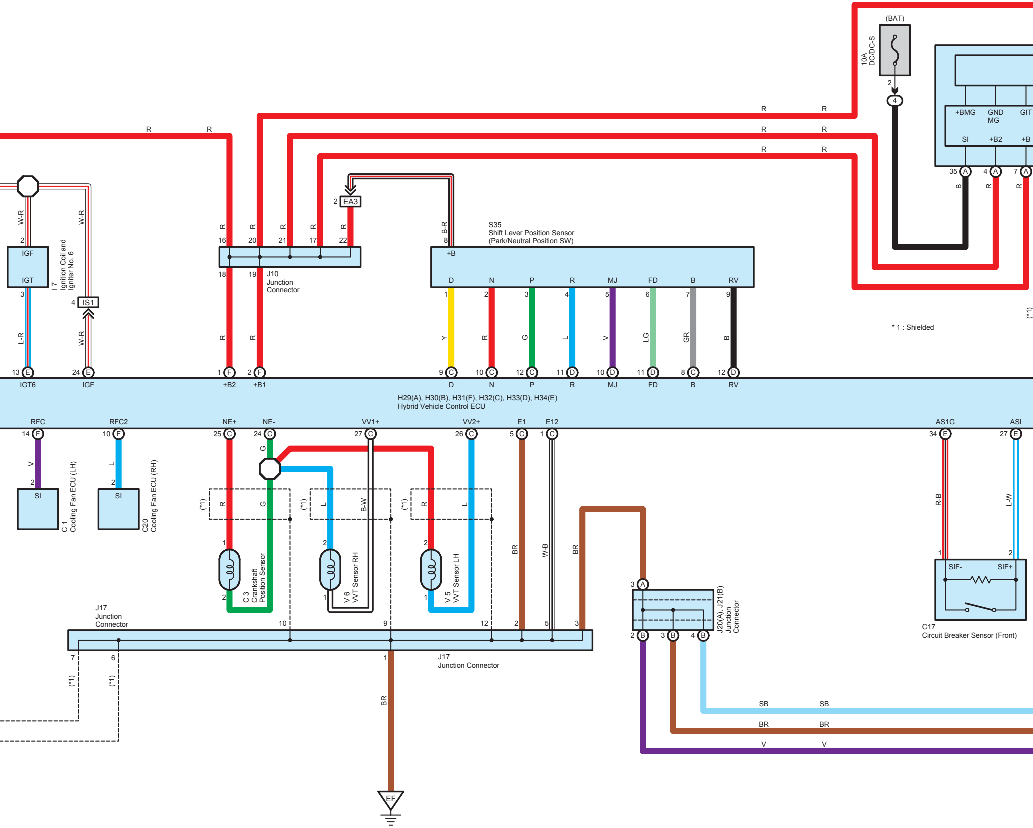
(BAT)
10A DC/DC-S
+BMG
GND MG
GIT
SI
+B2
+B
35 A
4 A
7 A
S35
Shift Lever Position Sensor
(Park/Neutral Position SW)
+B
D
N
P
R
MJ
FD
B
RV
EA3
J10
Junction
Connector
I 7
Ignition Coil and
Igniter No. 6
IGF
IGT
IS1
* 1 : Shielded
(*1)
IGT6
IGF
+B2
+B1
D
N
P
R
MJ
FD
B
RV
H29(A), H30(B), H31(F), H32(C), H33(D), H34(E)
Hybrid Vehicle Control ECU
RFC
RFC2
NE+
NE-
VV1+
VV2+
E1
E12
AS1G
ASI
C 1
Cooling Fan ECU (LH)
C20
Cooling Fan ECU (RH)
SI
C 3
Crankshaft
Position Sensor
V 6
VVT Sensor RH
V 5
VVT Sensor LH
J17
Junction
Connector
J17
Junction Connector
J20(A), J21(B)
Junction
Connector
C17
Circuit Breaker Sensor (Front)
SIF-
SIF+
EF
R
B-R
W-R
L-R
Y
G
L
V
LG
GR
B
BR
W-B
B-W
R-B
L-W
SB

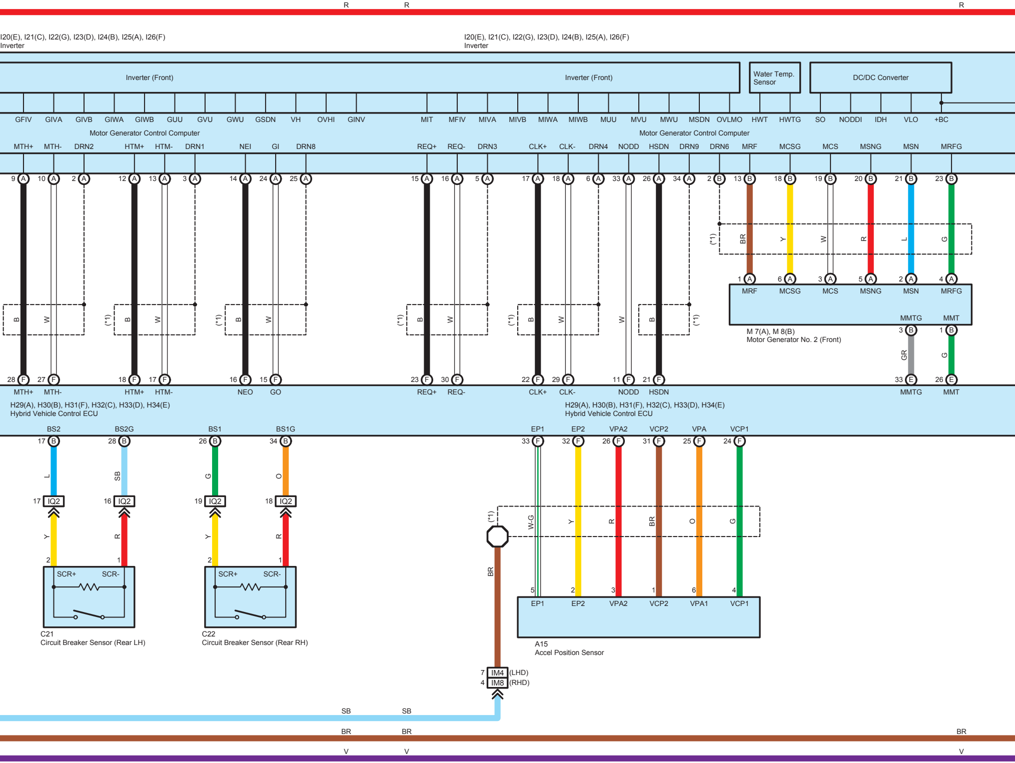
R
R
R
I20(E), I21(C), I22(G), I23(D), I24(B), I25(A), I26(F)
Inverter
I20(E), I21(C), I22(G), I23(D), I24(B), I25(A), I26(F)
Inverter
Inverter (Front)
Inverter (Front)
Water Temp. Sensor
DC/DC Converter
GFIV
GIVA
GIVB
GIWA
GIWB
GUU
GVU
GWU
GSDN
VH
OVHI
GINV
MIT
MFIV
MIVA
MIVB
MIWA
MIWB
MUU
MVU
MWU
MSDN
OVLMO
HWT
HWTG
SO
NODDI
IDH
VLO
+BC
Motor Generator Control Computer
Motor Generator Control Computer
MTH+
MTH-
DRN2
HTM+
HTM-
DRN1
NEI
GI
DRN8
REQ+
REQ-
DRN3
CLK+
CLK-
DRN4
NODD
HSDN
DRN9
DRN6
MRF
MCSG
MCS
MSNG
MSN
MRFG
9 A
10 A
2 A
12 A
13 A
3 A
14 A
24 A
25 A
15 A
16 A
5 A
17 A
18 A
6 A
33 A
26 A
34 A
2 B
13 B
18 B
19 B
20 B
21 B
23 B
B
W
(*1)
B
W
(*1)
B
W
(*1)
B
W
(*1)
B
W
W
B
(*1)
(*1)
BR
Y
W
R
L
G
1 A
6 A
3 A
5 A
2 A
4 A
MRF
MCSG
MCS
MSNG
MSN
MRFG
MMTG
MMT
M 7(A), M 8(B)
Motor Generator No. 2 (Front)
3 B
1 B
GR
G
28 F
27 F
18 F
17 F
16 F
15 F
23 F
30 F
22 F
29 F
11 F
21 F
33 E
26 E
MTH+
MTH-
HTM+
HTM-
NEO
GO
REQ+
REQ-
CLK+
CLK-
NODD
HSDN
MMTG
MMT
H29(A), H30(B), H31(F), H32(C), H33(D), H34(E)
Hybrid Vehicle Control ECU
H29(A), H30(B), H31(F), H32(C), H33(D), H34(E)
Hybrid Vehicle Control ECU
BS2
BS2G
BS1
BS1G
EP1
EP2
VPA2
VCP2
VPA
VCP1
17 B
28 B
26 B
34 B
33 F
32 F
26 F
31 F
25 F
24 F
L
SB
G
O
17 IQ2
16 IQ2
19 IQ2
18 IQ2
Y
R
Y
R
2
1
2
1
SCR+
SCR-
SCR+
SCR-
C21
Circuit Breaker Sensor (Rear LH)
C22
Circuit Breaker Sensor (Rear RH)
(*1)
W-G
Y
R
BR
O
G
BR
5
2
3
1
6
4
EP1
EP2
VPA2
VCP2
VPA1
VCP1
A15
Accel Position Sensor
7 IM4 (LHD)
4 IM8 (RHD)
SB
SB
BR
BR
BR
V
V
V

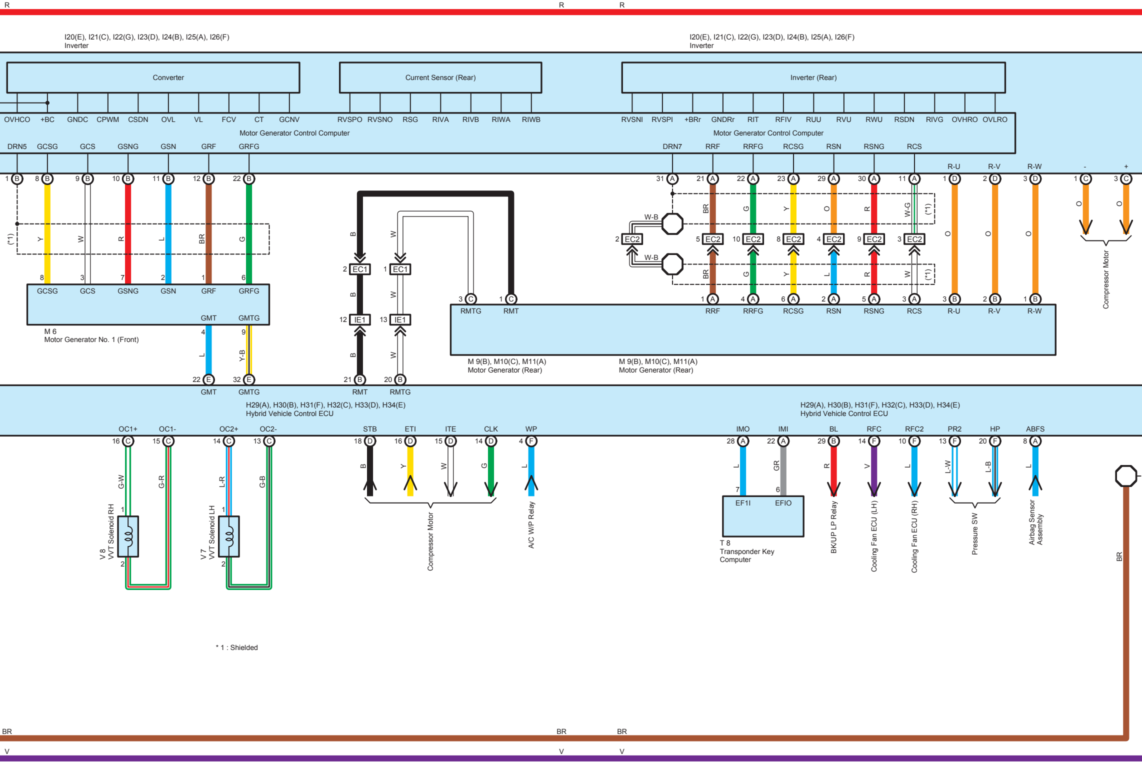
R
R
R
I20(E), I21(C), I22(G), I23(D), I24(B), I25(A), I26(F)
Inverter
I20(E), I21(C), I22(G), I23(D), I24(B), I25(A), I26(F)
Inverter
Converter
Current Sensor (Rear)
Inverter (Rear)
OVHCO
+BC
GNDC
CPWM
CSDN
OVL
VL
FCV
CT
GCNV
RVSPO
RVSNO
RSG
RIVA
RIVB
RIWA
RIWB
RVSNI
RVSPI
+BRr
GNDRr
RIT
RFIV
RUU
RVU
RWU
RSDN
RIVG
OVHRO
OVLRO
Motor Generator Control Computer
Motor Generator Control Computer
DRN5
GCSG
GCS
GSNG
GSN
GRF
GRFG
DRN7
RRF
RRFG
RCSG
RSN
RSNG
RCS
R-U
R-V
R-W
-
+
1 B
8 B
9 B
10 B
11 B
12 B
22 B
31 A
21 A
22 A
23 A
29 A
30 A
11 A
1 D
2 D
3 D
1 C
3 C
(*1)
Y
W
R
L
BR
G
8
3
7
2
1
6
GCSG
GCS
GSNG
GSN
GRF
GRFG
GMT
GMTG
M 6
Motor Generator No. 1 (Front)
4
9
L
Y-B
22 E
32 E
GMT
GMTG
B
W
2 EC1
1 EC1
B
W
12 IE1
13 IE1
B
W
21 B
20 B
RMT
RMTG
3 C
1 C
RMTG
RMT
W-B
W-B
2 EC2
BR
G
Y
O
R
W-G
(*1)
5 EC2
10 EC2
8 EC2
4 EC2
9 EC2
3 EC2
BR
G
Y
L
R
W
(*1)
O
O
O
O
O
Compressor Motor
1 A
4 A
6 A
2 A
5 A
3 A
3 B
2 B
1 B
RRF
RRFG
RCSG
RSN
RSNG
RCS
R-U
R-V
R-W
M 9(B), M10(C), M11(A)
Motor Generator (Rear)
M 9(B), M10(C), M11(A)
Motor Generator (Rear)
H29(A), H30(B), H31(F), H32(C), H33(D), H34(E)
Hybrid Vehicle Control ECU
H29(A), H30(B), H31(F), H32(C), H33(D), H34(E)
Hybrid Vehicle Control ECU
OC1+
OC1-
OC2+
OC2-
STB
ETI
ITE
CLK
WP
IMO
IMI
BL
RFC
RFC2
PR2
HP
ABFS
16 C
15 C
14 C
13 C
18 D
16 D
15 D
14 D
4 F
28 A
22 A
29 B
14 F
10 F
13 F
20 F
8 A
G-W
G-R
L-R
G-B
1
2
1
2
V 8
VVT Solenoid RH
V 7
VVT Solenoid LH
B
Y
W
G
L
Compressor Motor
A/C W/P Relay
L
GR
7
6
EF1I
EFIO
T 8
Transponder Key Computer
R
V
L
L-W
L-B
L
BK/UP LP Relay
Cooling Fan ECU (LH)
Cooling Fan ECU (RH)
Pressure SW
Airbag Sensor Assembly
BR
BR
BR
BR
V
V
V

* 1 : Shielded

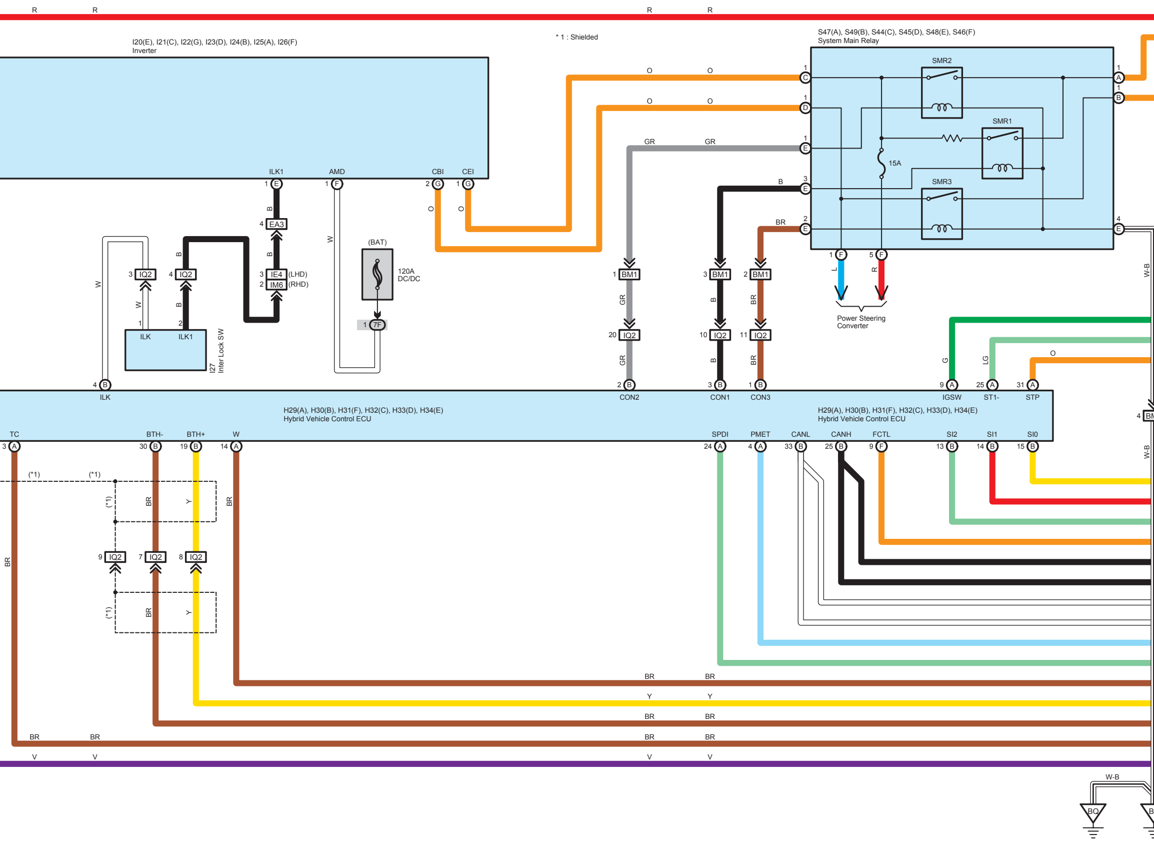
* 1 : Shielded
I20(E), I21(C), I22(G), I23(D), I24(B), I25(A), I26(F)
Inverter
ILK1
AMD
CBI
CEI
S47(A), S49(B), S44(C), S45(D), S48(E), S46(F)
System Main Relay
SMR2
SMR1
SMR3
15A
Power Steering Converter
(BAT)
120A DC/DC
7F
EA3
IE4
(LHD)
IM6
(RHD)
IQ2
BM1
ILK
ILK1
I27
Inter Lock SW
H29(A), H30(B), H31(F), H32(C), H33(D), H34(E)
Hybrid Vehicle Control ECU
ILK
CON2
CON1
CON3
IGSW
ST1-
STP
TC
BTH-
BTH+
W
SPDI
PMET
CANL
CANH
FCTL
SI2
SI1
SI0
(*1)
W-B
BQ
R
O
GR
B
BR
L
G
LG
Y
V

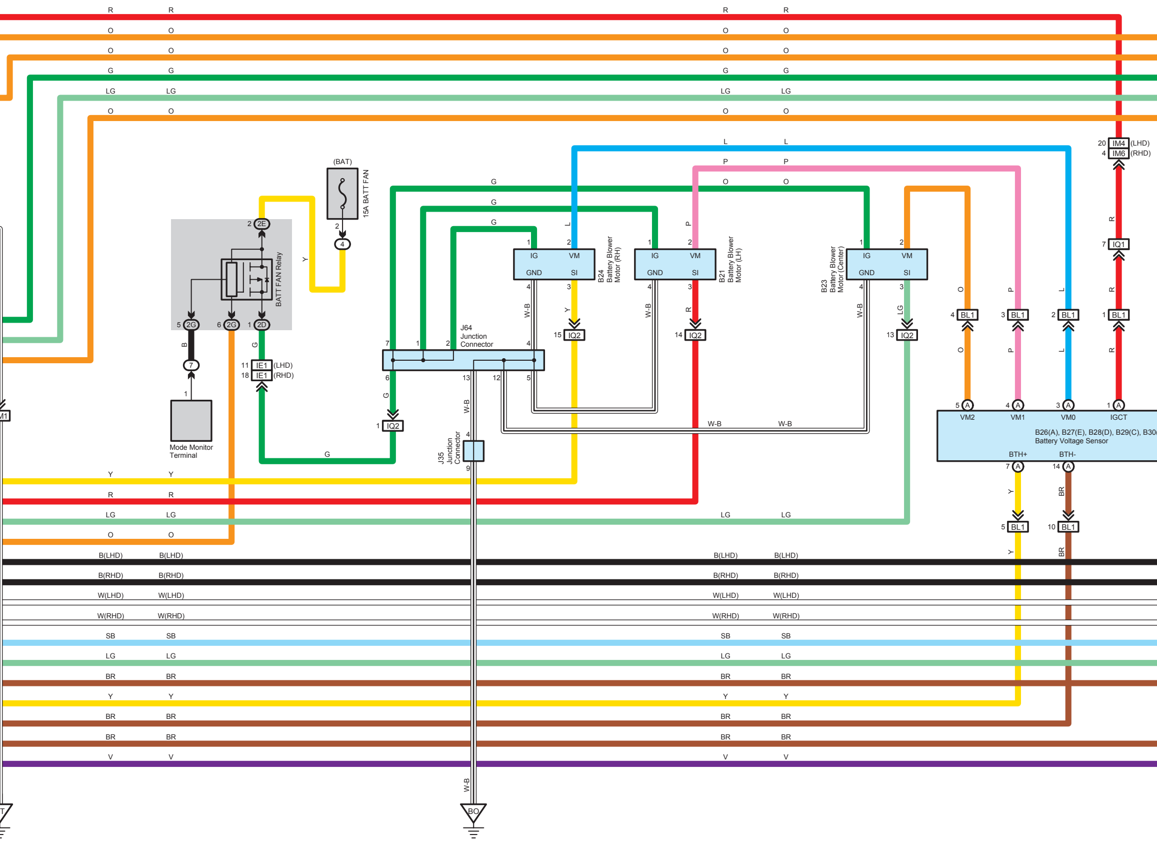
(BAT)
15A BATT FAN
BATT FAN Relay
2E
2G
2D
Mode Monitor Terminal
IE1 (LHD)
IE1 (RHD)
J64 Junction Connector
J35 Junction Connector
IQ2
IQ1
IM4 (LHD)
IM6 (RHD)
BL1
B24 Battery Blower Motor (RH)
B21 Battery Blower Motor (LH)
B23 Battery Blower Motor (Center)
IG
VM
GND
SI
VM2
VM1
VM0
IGCT
BTH+
BTH-
B26(A), B27(E), B28(D), B29(C), B30
Battery Voltage Sensor
R
O
G
LG
L
P
Y
B
W-B
BR
B(LHD)
B(RHD)
W(LHD)
W(RHD)
SB
V
BO
T
M1

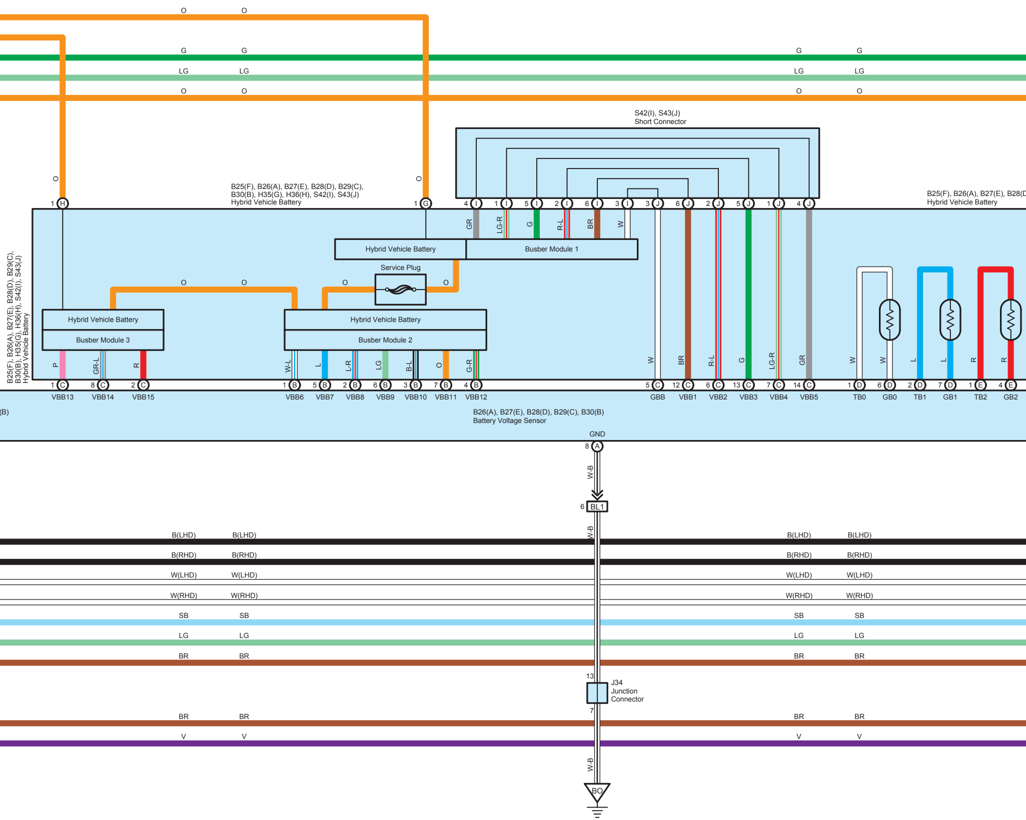
O O
G G G G
LG LG LG LG
O O O O
S42(I), S43(J)
Short Connector
B25(F), B26(A), B27(E), B28(D), B29(C), B30(B), H35(G), H36(H), S42(I), S43(J)
Hybrid Vehicle Battery
B25(F), B26(A), B27(E), B28(D
Hybrid Vehicle Battery
B25(F), B26(A), B27(E), B28(D), B29(C), B30(B), H35(G), H36(H), S42(I), S43(J)
Hybrid Vehicle Battery
1 H
1 G
4 I
1 I
5 I
2 I
6 I
3 I
3 J
6 J
2 J
5 J
1 J
4 J
GR
LG-R
G
R-L
BR
W
Hybrid Vehicle Battery
Busber Module 1
Service Plug
O O O O
Hybrid Vehicle Battery
Busber Module 3
Hybrid Vehicle Battery
Busber Module 2
P
GR-L
R
W-L
L
L-R
LG
B-L
O
G-R
W
BR
R-L
G
LG-R
GR
W
W
L
L
R
R
1 C VBB13
8 C VBB14
2 C VBB15
1 B VBB6
5 B VBB7
2 B VBB8
6 B VBB9
3 B VBB10
7 B VBB11
4 B VBB12
5 C GBB
12 C VBB1
6 C VBB2
13 C VBB3
7 C VBB4
14 C VBB5
1 D TB0
6 D GB0
2 D TB1
7 D GB1
1 E TB2
4 E GB2
(B)
B26(A), B27(E), B28(D), B29(C), B30(B)
Battery Voltage Sensor
GND
8 A
W-B
6 BL1
W-B
B(LHD) B(LHD) B(LHD) B(LHD)
B(RHD) B(RHD) B(RHD) B(RHD)
W(LHD) W(LHD) W(LHD) W(LHD)
W(RHD) W(RHD) W(RHD) W(RHD)
SB SB SB SB
LG LG LG LG
BR BR BR BR
13
J34
Junction
Connector
7
BR BR BR BR
V V V V
W-B
BO

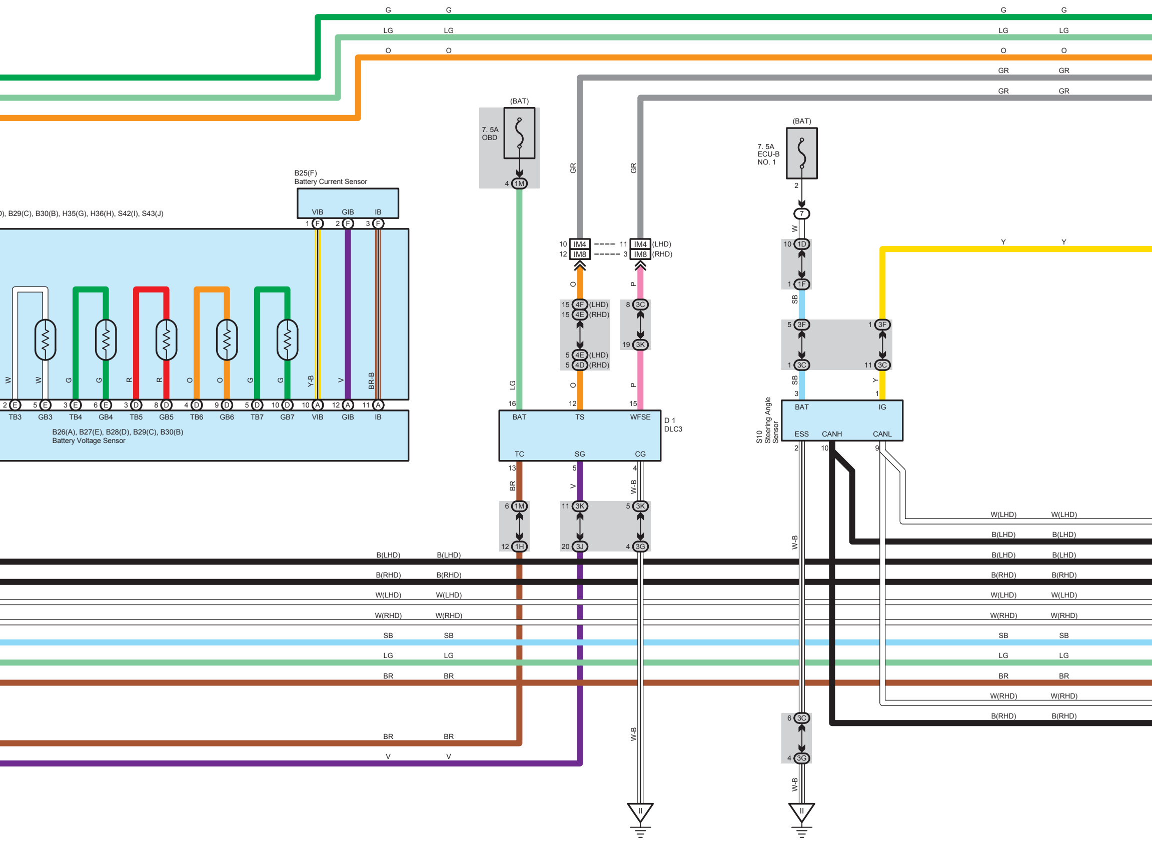
G
LG
O
GR
(BAT)
7. 5A
OBD
4 1M
(BAT)
7. 5A
ECU-B
NO. 1
2
7
W
10 1D
1 1F
SB
5 3F
1 3F
1 3C
11 3C
SB
Y
3
1
B25(F)
Battery Current Sensor
VIB GIB IB
1 F 2 F 3 F
), B29(C), B30(B), H35(G), H36(H), S42(I), S43(J)
10 IM4 11 IM4 (LHD)
12 IM8 3 IM8 (RHD)
O
P
15 4F (LHD)
15 4E (RHD)
8 3C
19 3K
5 4E (LHD)
5 4D (RHD)
W W G G R R O O G G Y-B V BR-B
LG O P
2 E 5 E 3 E 6 E 3 D 8 D 4 D 9 D 5 D 10 D 10 A 12 A 11 A
TB3 GB3 TB4 GB4 TB5 GB5 TB6 GB6 TB7 GB7 VIB GIB IB
B26(A), B27(E), B28(D), B29(C), B30(B)
Battery Voltage Sensor
16 12 15
BAT TS WFSE
D 1
DLC3
TC SG CG
13 5 4
BR V W-B
6 1M
12 1H
11 3K
20 3J
5 3K
4 3G
S10
Steering Angle
Sensor
BAT IG
ESS CANH CANL
2 10 9
W-B
W(LHD)
B(LHD)
B(RHD)
W(RHD)
SB
LG
BR
V
6 3C
4 3G
W-B

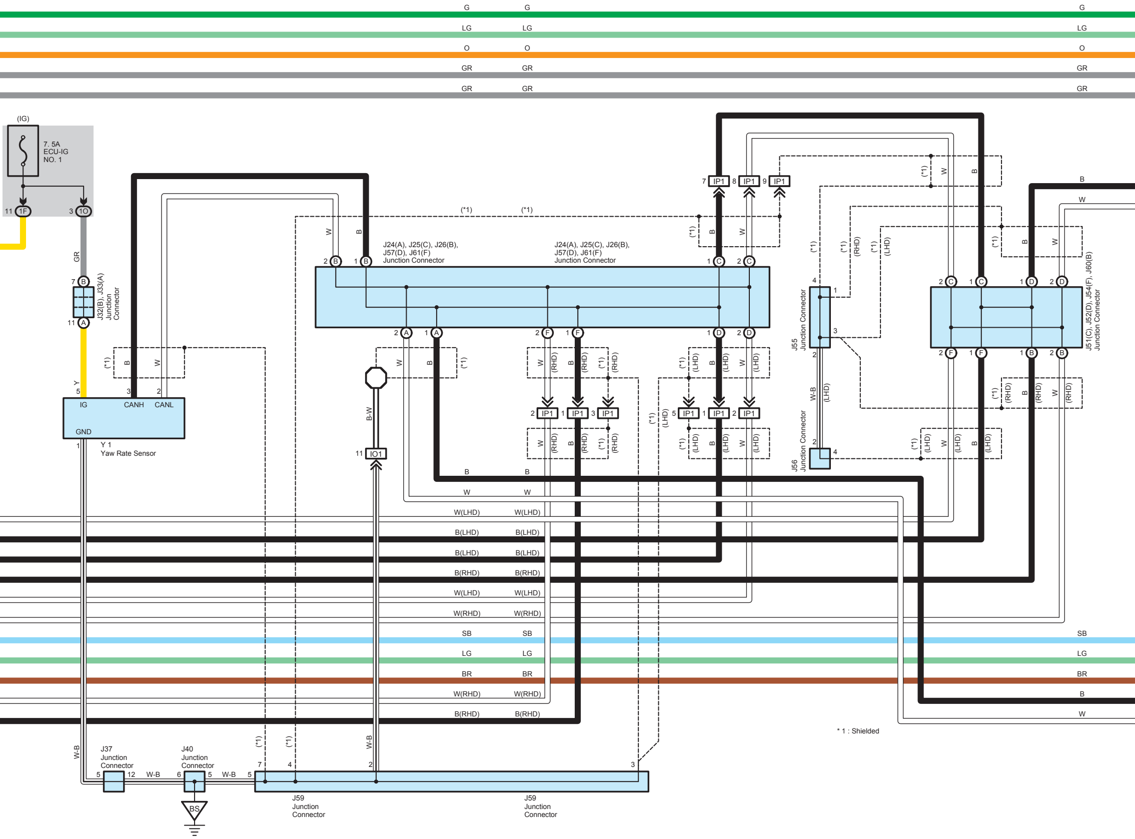
G
LG
O
GR
GR
(IG)
7. 5A
ECU-IG
NO. 1
11 1F
3 1O
GR
7 B
11 A
J32(B), J33(A)
Junction
Connector
Y
5
3
2
IG
CANH
CANL
GND
1
Y 1
Yaw Rate Sensor
(*1)
B
W
J24(A), J25(C), J26(B),
J57(D), J61(F)
Junction Connector
J24(A), J25(C), J26(B),
J57(D), J61(F)
Junction Connector
2 B
1 B
1 C
2 C
2 A
1 A
2 F
1 F
1 D
2 D
7 IP1
8 IP1
9 IP1
2 IP1
1 IP1
3 IP1
5 IP1
1 IP1
2 IP1
(RHD)
(LHD)
B-W
11 IO1
W-B
J55
Junction Connector
J56
Junction Connector
4
1
3
2
J51(C), J52(D), J54(F), J60(B)
Junction Connector
2 C
1 C
1 D
2 D
2 F
1 F
1 B
2 B
W(LHD)
B(LHD)
B(LHD)
B(RHD)
W(LHD)
W(RHD)
SB
LG
BR
W(RHD)
B(RHD)
B
W
* 1 : Shielded
J37
Junction
Connector
J40
Junction
Connector
5
12
W-B
6
5
W-B
5
BS
7
4
2
3
J59
Junction
Connector
J59
Junction
Connector

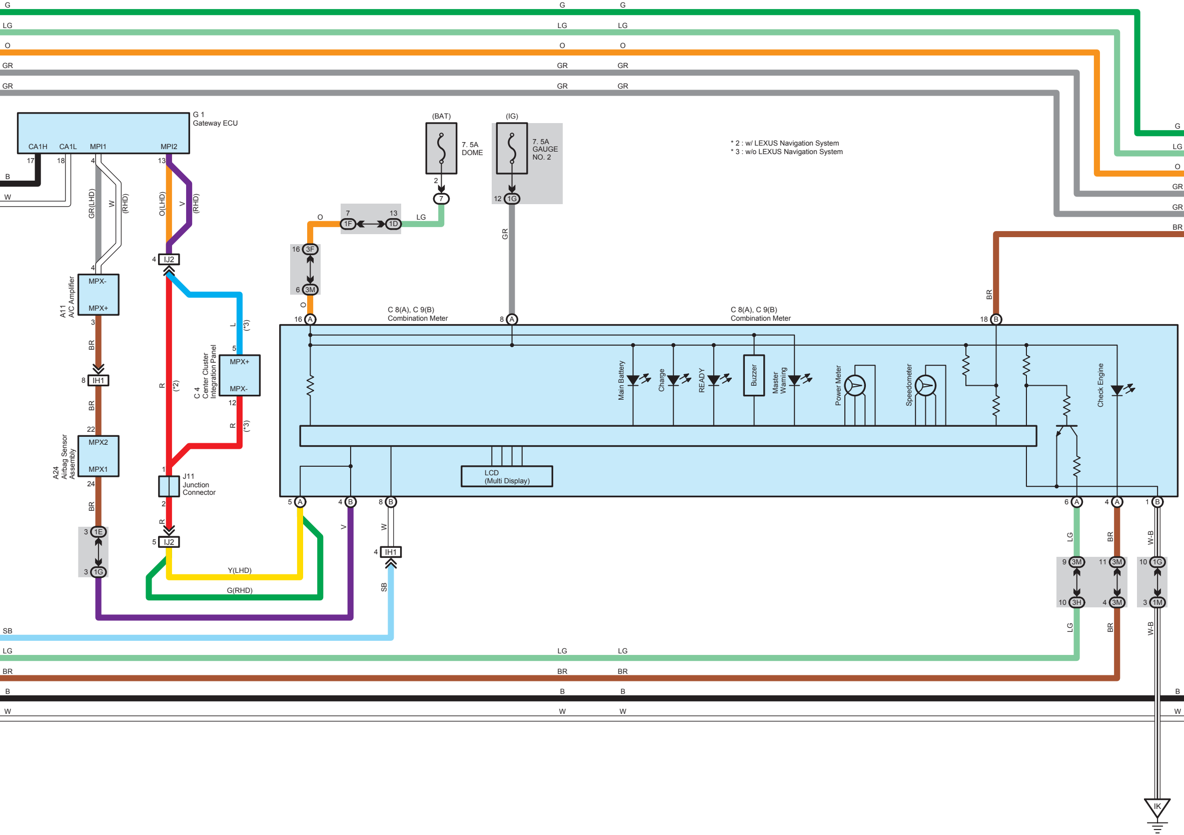
G
LG
O
GR
GR
G 1
Gateway ECU
CA1H
CA1L
MPI1
MPI2
17
18
4
13
B
W
GR(LHD)
W
(RHD)
O(LHD)
V
(RHD)
(BAT)
7. 5A
DOME
2
7
(IG)
7. 5A
GAUGE
NO. 2
12
1G
GR
O
7
1F
13
1D
LG
16
3F
6
3M
O
4
IJ2
L
(*3)
5
MPX+
MPX-
12
C 4
Center Cluster
Integration Panel
R
(*3)
R
(*2)
4
MPX-
MPX+
3
A11
A/C Amplifier
BR
8
IH1
BR
22
MPX2
MPX1
24
A24
Airbag Sensor
Assembly
BR
3
1E
3
1G
1
J11
Junction
Connector
2
R
5
IJ2
Y(LHD)
G(RHD)
C 8(A), C 9(B)
Combination Meter
16
A
8
A
C 8(A), C 9(B)
Combination Meter
18
B
BR
Main Battery
Charge
READY
Buzzer
Master
Warning
Power Meter
Speedometer
Check Engine
LCD
(Multi Display)
5
A
4
B
8
B
V
W
4
IH1
SB
6
A
4
A
1
B
LG
BR
W-B
9
3M
10
3H
11
3M
4
3M
10
1G
3
1M
LG
BR
W-B
IK
SB
LG
BR
B
W

* 2 : w/ LEXUS Navigation System
* 3 : w/o LEXUS Navigation System

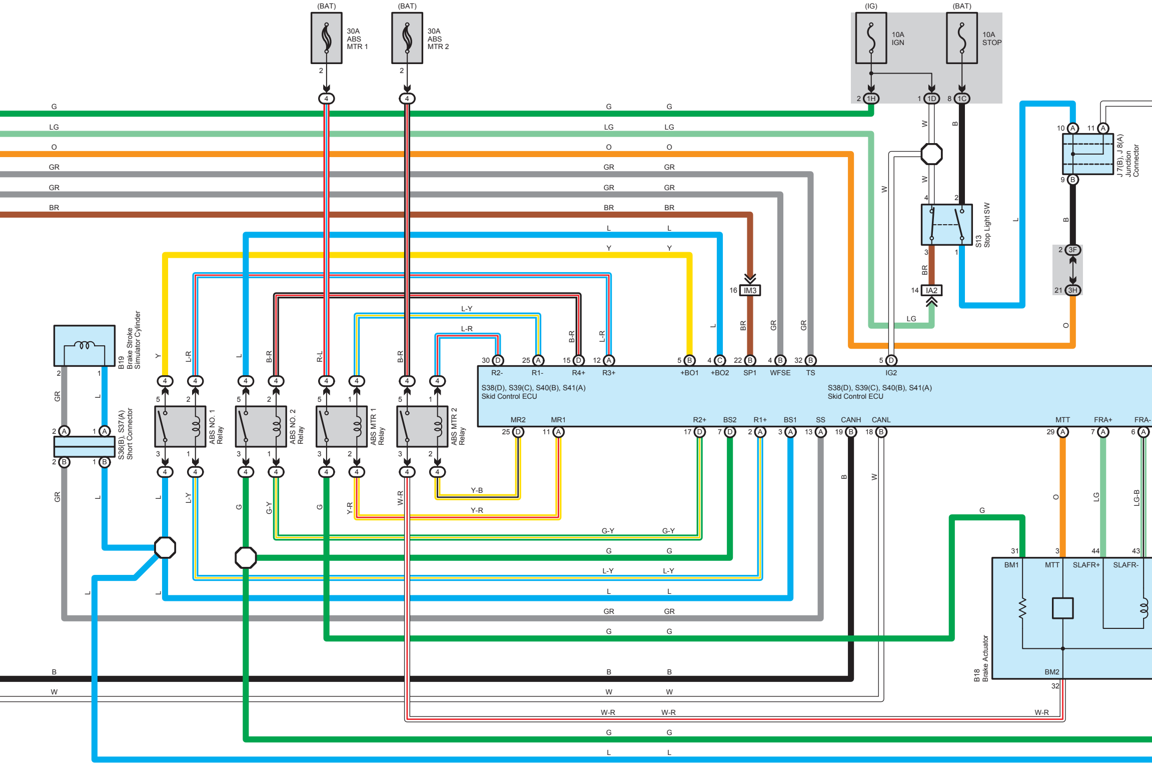
(BAT)
30A
ABS
MTR 1
(BAT)
30A
ABS
MTR 2
(IG)
10A
IGN
(BAT)
10A
STOP
2 1H
1 1D
8 1C
10 A
11 A
9 B
J 7(B), J 8(A)
Junction
Connector
G
LG
O
GR
GR
BR
L
Y
S13
Stop Light SW
16 IM3
14 IA2
2 3F
21 3H
B19
Brake Stroke
Simulator Cylinder
S36(B), S37(A)
Short Connector
ABS NO. 1
Relay
ABS NO. 2
Relay
ABS MTR 1
Relay
ABS MTR 2
Relay
L-Y
L-R
B-R
R-L
L-R
Y-B
Y-R
G-Y
W-R
30 D
R2-
25 A
R1-
15 D
R4+
12 A
R3+
5 B
+BO1
4 C
+BO2
22 B
SP1
4 B
WFSE
32 B
TS
5 D
IG2
S38(D), S39(C), S40(B), S41(A)
Skid Control ECU
S38(D), S39(C), S40(B), S41(A)
Skid Control ECU
MR2
25 D
MR1
11 A
R2+
17 D
BS2
7 D
R1+
2 A
BS1
3 A
SS
13 A
CANH
19 B
CANL
18 B
MTT
29 A
FRA+
7 A
FRA-
6 A
LG-B
B18
Brake Actuator
BM1
31
MTT
3
SLAFR+
44
SLAFR-
43
BM2
32
B
W
W-R
G
L

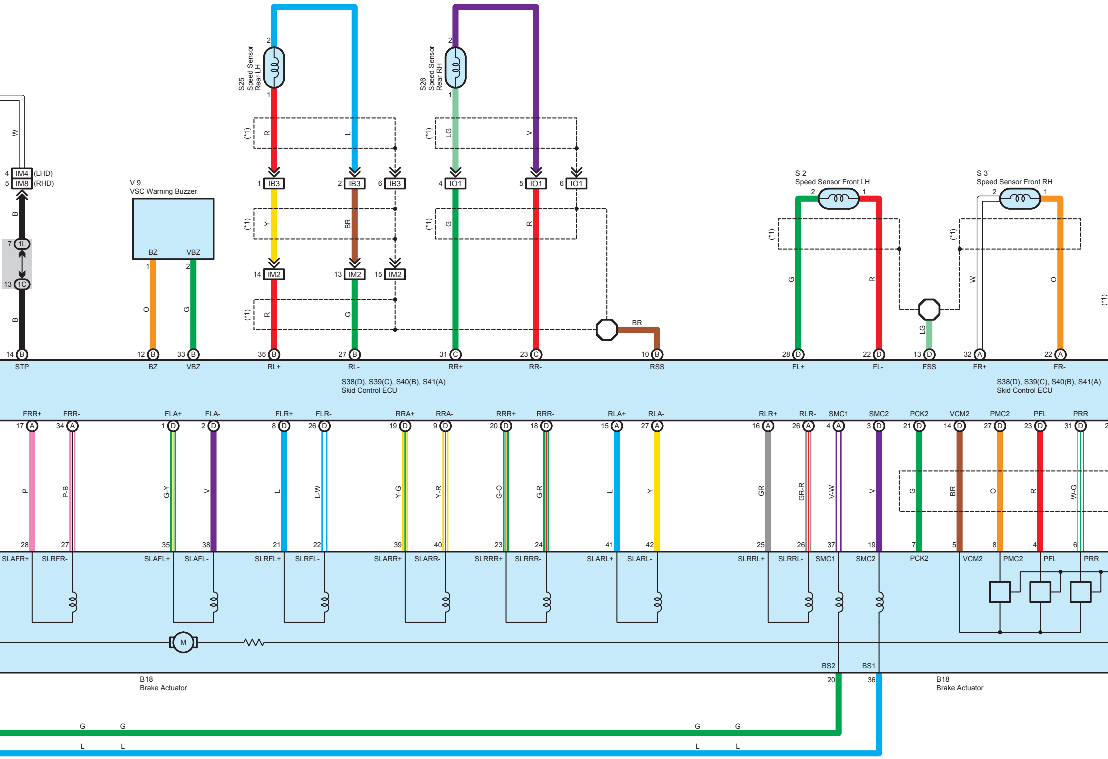
S25
Speed Sensor
Rear LH
S26
Speed Sensor
Rear RH
S 2
Speed Sensor Front LH
S 3
Speed Sensor Front RH
V 9
VSC Warning Buzzer
BZ
VBZ
IM4 (LHD)
IM8 (RHD)
1L
1C
IB3
IO1
IM2
(*1)
W
B
O
G
R
L
Y
BR
LG
V
STP
BZ
VBZ
RL+
RL-
RR+
RR-
RSS
FL+
FL-
FSS
FR+
FR-
S38(D), S39(C), S40(B), S41(A)
Skid Control ECU
FRR+
FRR-
FLA+
FLA-
FLR+
FLR-
RRA+
RRA-
RRR+
RRR-
RLA+
RLA-
RLR+
RLR-
SMC1
SMC2
PCK2
VCM2
PMC2
PFL
PRR
P
P-B
G-Y
L-W
Y-G
Y-R
G-O
G-R
GR
GR-R
V-W
W-G
SLAFR+
SLRFR-
SLAFL+
SLAFL-
SLRFL+
SLRFL-
SLARR+
SLARR-
SLRRR+
SLRRR-
SLARL+
SLARL-
SLRRL+
SLRRL-
M
BS2
BS1
B18
Brake Actuator

* 1 : Shielded

* 1 : Shielded

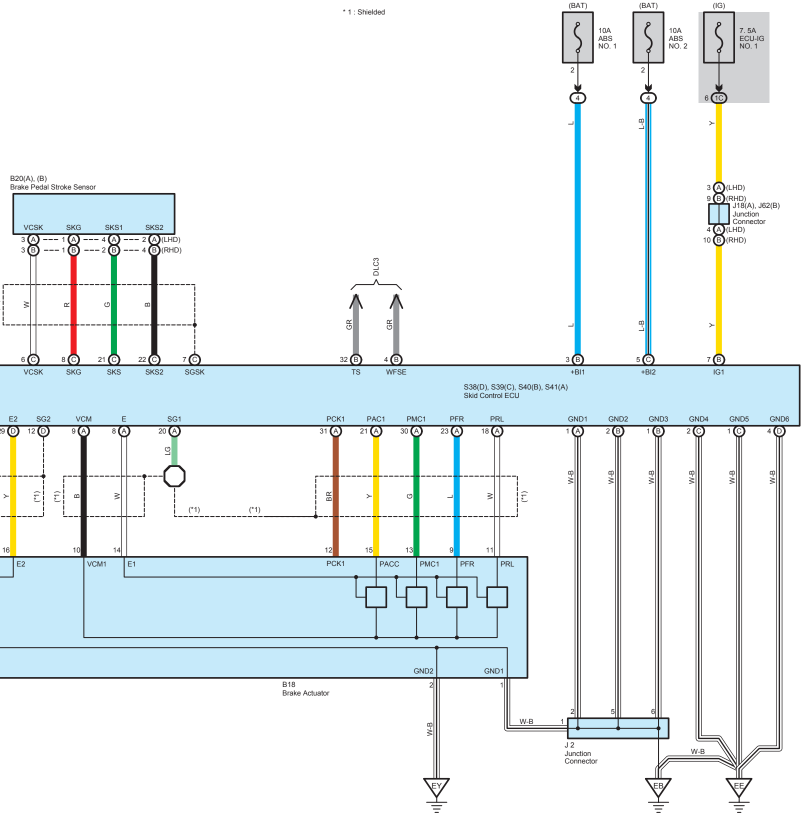
(BAT)
10A
ABS
NO. 1
2
4
L
(BAT)
10A
ABS
NO. 2
2
4
L-B
(IG)
7. 5A
ECU-IG
NO. 1
6
1C
Y
3 A (LHD)
9 B (RHD)
J18(A), J62(B)
Junction
Connector
4 A (LHD)
10 B (RHD)
B20(A), (B)
Brake Pedal Stroke Sensor
VCSK
SKG
SKS1
SKS2
3 A
1 A
4 A
2 A (LHD)
3 B
1 B
2 B
4 B (RHD)
W
R
G
B
DLC3
GR
GR
6 C
8 C
21 C
22 C
7 C
32 B
4 B
3 B
5 C
7 B
VCSK
SKG
SKS
SKS2
SGSK
TS
WFSE
+BI1
+BI2
IG1
S38(D), S39(C), S40(B), S41(A)
Skid Control ECU
E2
SG2
VCM
E
SG1
PCK1
PAC1
PMC1
PFR
PRL
GND1
GND2
GND3
GND4
GND5
GND6
29 D
12 D
9 A
8 A
20 A
31 A
21 A
30 A
23 A
18 A
1 A
2 B
1 B
2 C
1 C
4 D
LG
Y
(*1)
(*1)
B
W
(*1)
(*1)
BR
Y
G
L
W
(*1)
W-B
W-B
W-B
W-B
W-B
W-B
16
10
14
12
15
13
9
11
E2
VCM1
E1
PCK1
PACC
PMC1
PFR
PRL
GND2
GND1
2
1
B18
Brake Actuator
W-B
W-B
1
2
5
6
J 2
Junction
Connector
W-B
EY
EB
EE