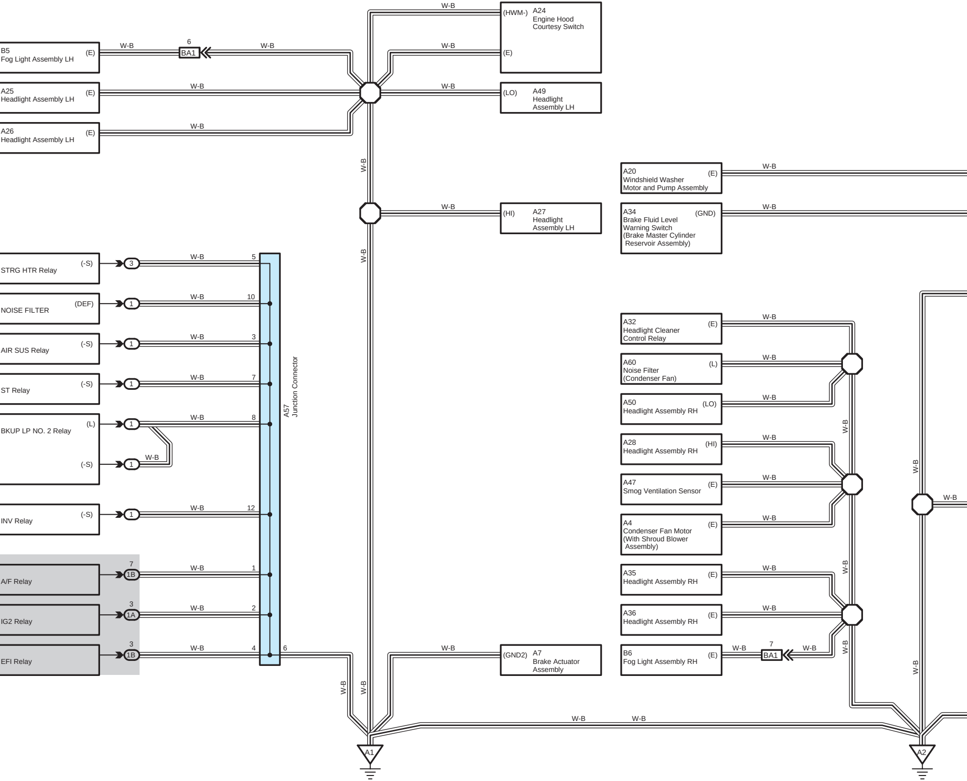
W-B
(HWM-)
A24
Engine Hood
Courtesy Switch
(E)
B5
Fog Light Assembly LH
(E)
W-B
6
BA1
W-B
A25
Headlight Assembly LH
(E)
W-B
(LO)
A49
Headlight
Assembly LH
A26
Headlight Assembly LH
(E)
W-B
A20
Windshield Washer
Motor and Pump Assembly
(E)
W-B
A34
Brake Fluid Level
Warning Switch
(Brake Master Cylinder
Reservoir Assembly)
(GND)
W-B
(HI)
A27
Headlight
Assembly LH
STRG HTR Relay
(-S)
3
5
NOISE FILTER
(DEF)
1
10
AIR SUS Relay
(-S)
1
3
ST Relay
(-S)
1
7
BKUP LP NO. 2 Relay
(L)
1
8
(-S)
1
W-B
INV Relay
(-S)
1
12
A/F Relay
7
1B
1
IG2 Relay
3
1A
2
EFI Relay
3
1B
4
6
A57
Junction Connector
A32
Headlight Cleaner
Control Relay
(E)
A60
Noise Filter
(Condenser Fan)
(L)
A50
Headlight Assembly RH
(LO)
A28
Headlight Assembly RH
(HI)
A47
Smog Ventilation Sensor
(E)
A4
Condenser Fan Motor
(With Shroud Blower
Assembly)
(E)
A35
Headlight Assembly RH
(E)
A36
Headlight Assembly RH
(E)
B6
Fog Light Assembly RH
(E)
W-B
7
BA1
W-B
(GND2)
A7
Brake Actuator
Assembly
W-B
A1
A2

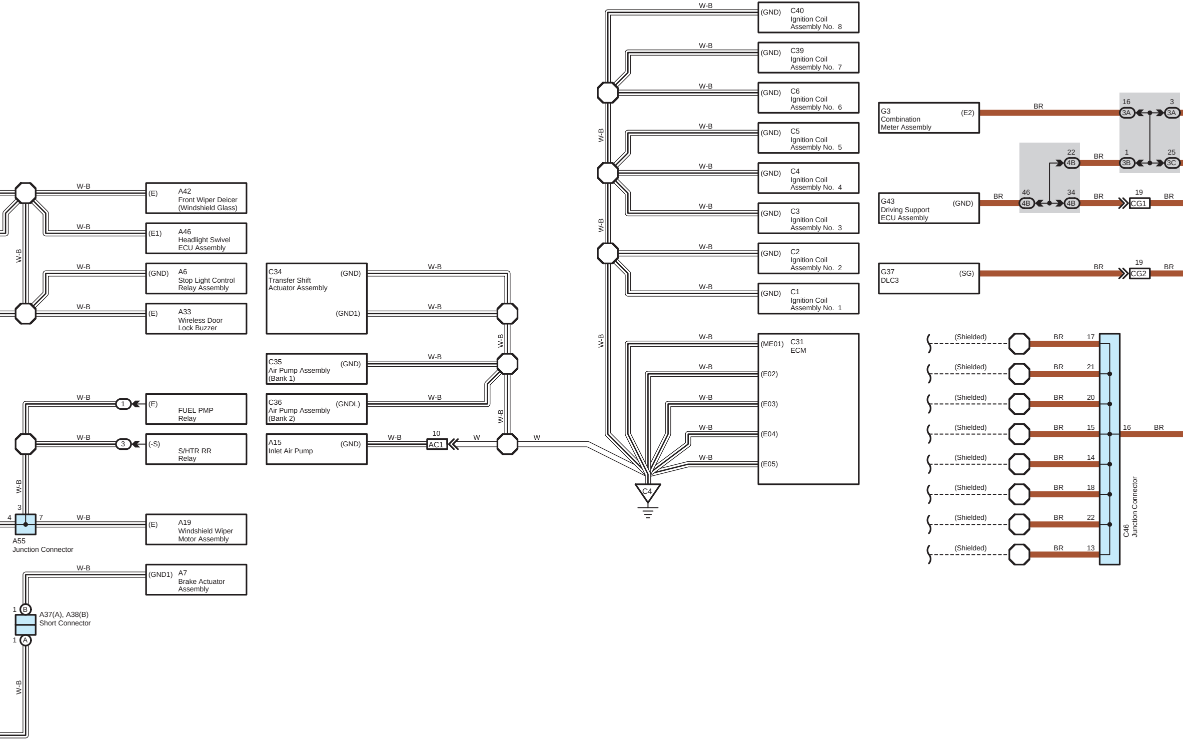
W-B
(GND) C40 Ignition Coil Assembly No. 8
W-B
(GND) C39 Ignition Coil Assembly No. 7
W-B
(GND) C6 Ignition Coil Assembly No. 6
W-B
(GND) C5 Ignition Coil Assembly No. 5
W-B
(GND) C4 Ignition Coil Assembly No. 4
W-B
(GND) C3 Ignition Coil Assembly No. 3
W-B
(GND) C2 Ignition Coil Assembly No. 2
W-B
(GND) C1 Ignition Coil Assembly No. 1
W-B
(ME01) C31 ECM
(E02)
(E03)
(E04)
(E05)
C4
G3 Combination Meter Assembly (E2)
BR
16 3A
3 3A
22 4B
1 3B
25 3C
46 4B
34 4B
19 CG1
G43 Driving Support ECU Assembly (GND)
G37 DLC3 (SG)
19 CG2
(Shielded)
17
21
20
15
14
18
22
13
16
C46 Junction Connector
(E) A42 Front Wiper Deicer (Windshield Glass)
(E1) A46 Headlight Swivel ECU Assembly
(GND) A6 Stop Light Control Relay Assembly
(E) A33 Wireless Door Lock Buzzer
C34 Transfer Shift Actuator Assembly (GND) (GND1)
C35 Air Pump Assembly (Bank 1) (GND)
C36 Air Pump Assembly (Bank 2) (GNDL)
A15 Inlet Air Pump (GND)
10 AC1
W
1 (E) FUEL PMP Relay
3 (-S) S/HTR RR Relay
3
4
7
A55 Junction Connector
(E) A19 Windshield Wiper Motor Assembly
(GND1) A7 Brake Actuator Assembly
1 B
1 A
A37(A), A38(B) Short Connector

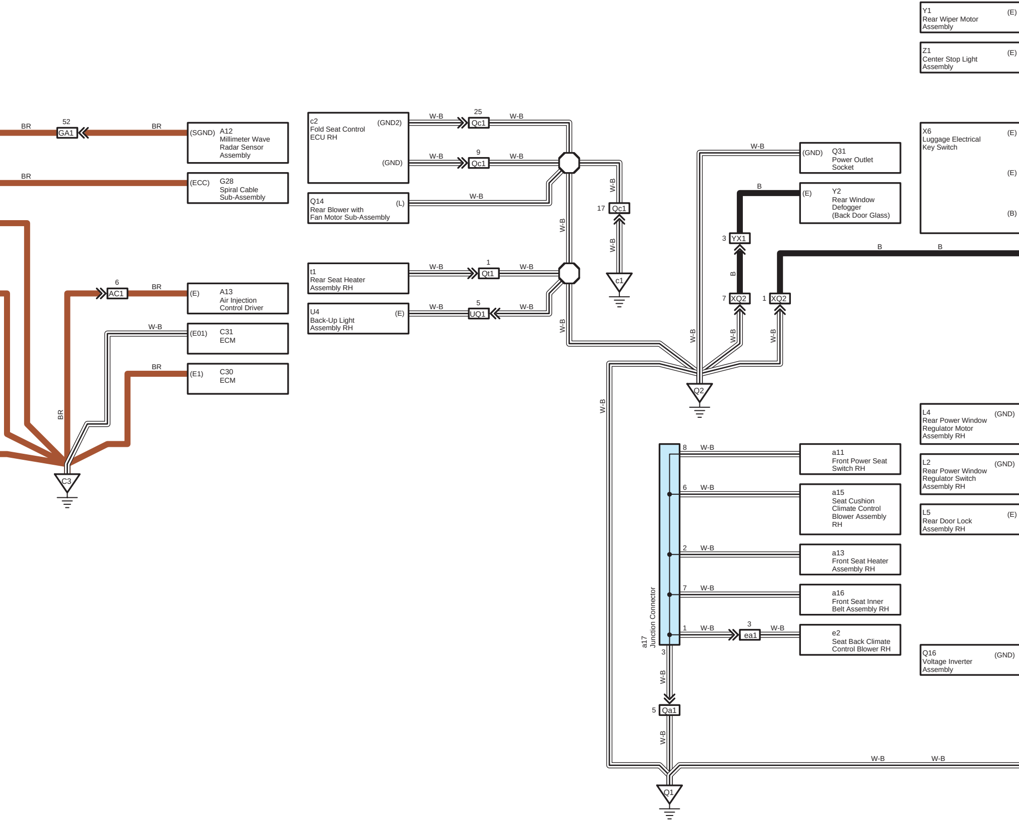
Y1
Rear Wiper Motor Assembly
(E)
Z1
Center Stop Light Assembly
(E)
BR
52
GA1
BR
(SGND)
A12
Millimeter Wave Radar Sensor Assembly
BR
(ECC)
G28
Spiral Cable Sub-Assembly
c2
Fold Seat Control ECU RH
(GND2)
(GND)
W-B
25
Qc1
W-B
W-B
9
Qc1
W-B
Q14
Rear Blower with Fan Motor Sub-Assembly
(L)
W-B
W-B
17
Qc1
W-B
c1
W-B
(GND)
Q31
Power Outlet Socket
B
(E)
Y2
Rear Window Defogger (Back Door Glass)
X6
Luggage Electrical Key Switch
(E)
(E)
(B)
3
YX1
B
B
B
t1
Rear Seat Heater Assembly RH
W-B
1
Qt1
W-B
6
AC1
BR
(E)
A13
Air Injection Control Driver
U4
Back-Up Light Assembly RH
(E)
W-B
5
UQ1
W-B
7
XQ2
1
XQ2
W-B
(E01)
C31
ECM
W-B
W-B
W-B
W-B
BR
(E1)
C30
ECM
Q2
BR
C3
W-B
L4
Rear Power Window Regulator Motor Assembly RH
(GND)
8
W-B
a11
Front Power Seat Switch RH
L2
Rear Power Window Regulator Switch Assembly RH
(GND)
6
W-B
a15
Seat Cushion Climate Control Blower Assembly RH
L5
Rear Door Lock Assembly RH
(E)
2
W-B
a13
Front Seat Heater Assembly RH
7
W-B
a16
Front Seat Inner Belt Assembly RH
1
W-B
3
ea1
W-B
e2
Seat Back Climate Control Blower RH
a17
Junction Connector
Q16
Voltage Inverter Assembly
(GND)
3
W-B
5
Qa1
W-B
W-B
W-B
Q1

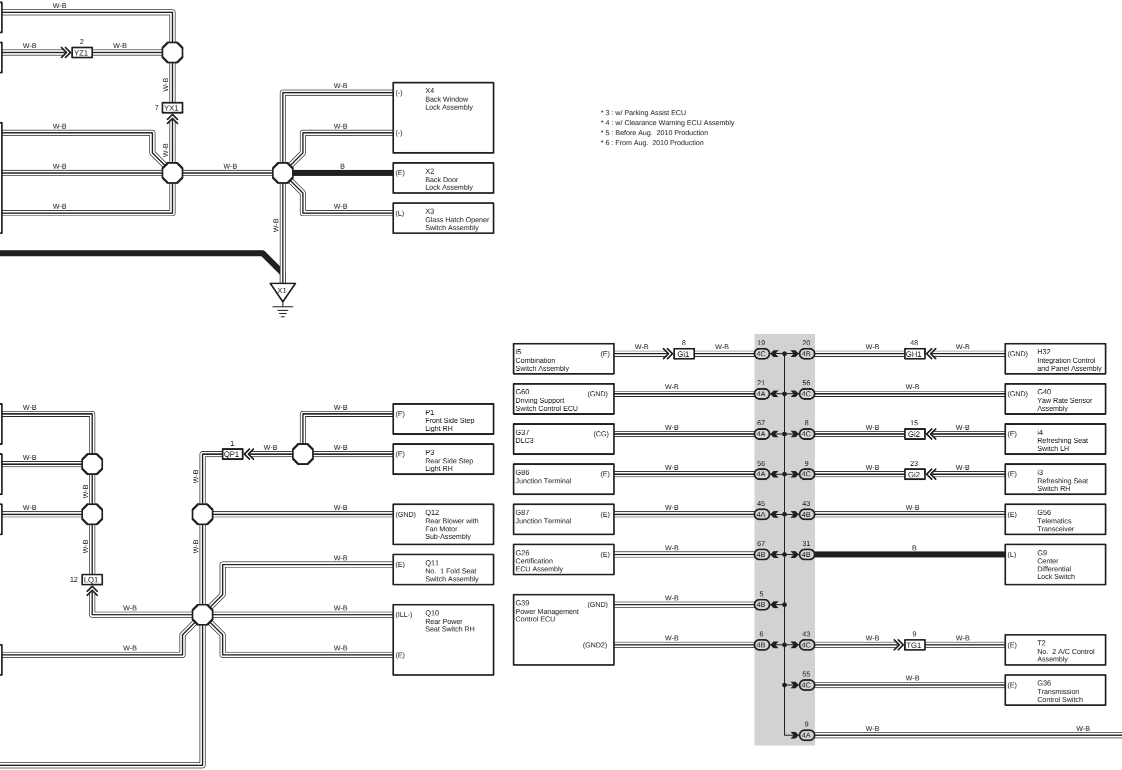
W-B
2
YZ1
7
YX1
B
X1
X4
Back Window
Lock Assembly
(-)
X2
Back Door
Lock Assembly
(E)
X3
Glass Hatch Opener
Switch Assembly
(L)
1
QP1
12
LQ1
P1
Front Side Step
Light RH
P3
Rear Side Step
Light RH
(GND)
Q12
Rear Blower with
Fan Motor
Sub-Assembly
Q11
No. 1 Fold Seat
Switch Assembly
(ILL-)
Q10
Rear Power
Seat Switch RH
i5
Combination
Switch Assembly
8
Gi1
G60
Driving Support
Switch Control ECU
G37
DLC3
(CG)
G86
Junction Terminal
G87
Junction Terminal
G26
Certification
ECU Assembly
G39
Power Management
Control ECU
(GND2)
19
4C
21
4A
67
56
45
4B
5
6
20
48
GH1
H32
Integration Control
and Panel Assembly
G40
Yaw Rate Sensor
Assembly
15
Gi2
i4
Refreshing Seat
Switch LH
9
23
i3
Refreshing Seat
Switch RH
43
G56
Telematics
Transceiver
31
G9
Center
Differential
Lock Switch
TG1
T2
No. 2 A/C Control
Assembly
55
G36
Transmission
Control Switch

* 3 : w/ Parking Assist ECU
* 4 : w/ Clearance Warning ECU Assembly
* 5 : Before Aug. 2010 Production
* 6 : From Aug. 2010 Production

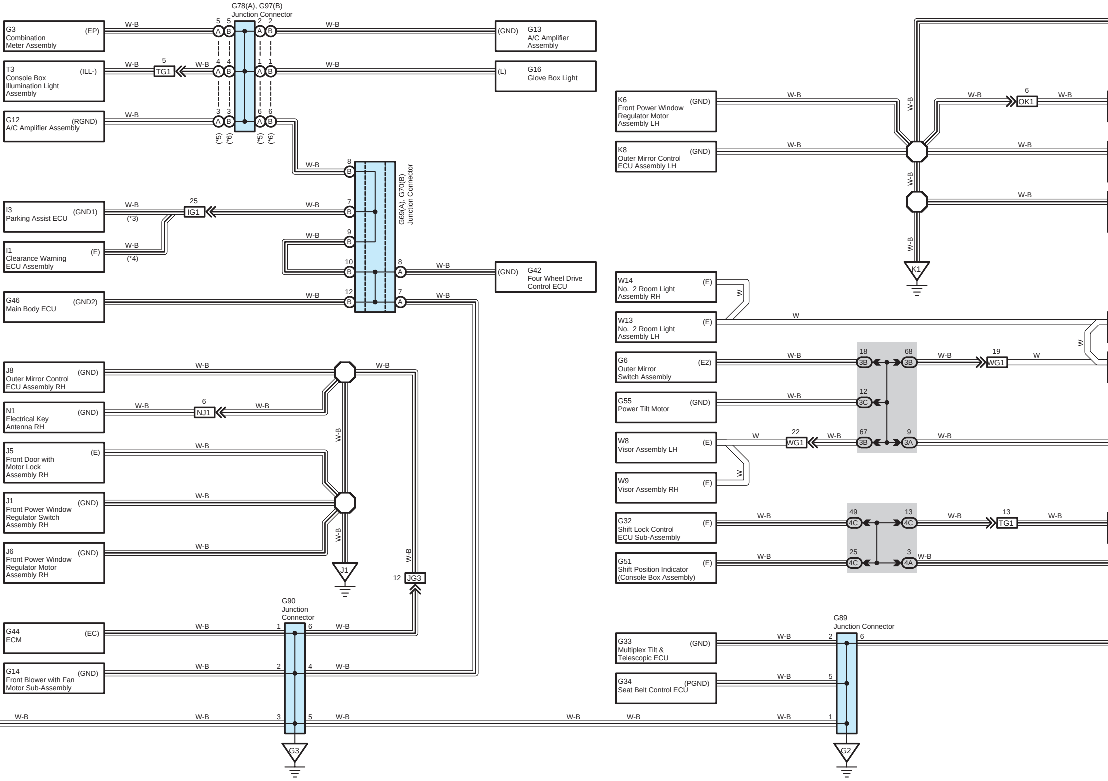
G78(A), G97(B) Junction Connector
G3 Combination Meter Assembly (EP)
T3 Console Box Illumination Light Assembly (ILL-)
G12 A/C Amplifier Assembly (RGND)
TG1
(*5) (*6) (*5) (*6)
(GND) G13 A/C Amplifier Assembly
(L) G16 Glove Box Light
G69(A), G70(B) Junction Connector
I3 Parking Assist ECU (GND1)
(*3)
IG1
I1 Clearance Warning ECU Assembly (E)
(*4)
(GND) G42 Four Wheel Drive Control ECU
G46 Main Body ECU (GND2)
J8 Outer Mirror Control ECU Assembly RH (GND)
N1 Electrical Key Antenna RH (GND)
NJ1
J5 Front Door with Motor Lock Assembly RH (E)
J1 Front Power Window Regulator Switch Assembly RH (GND)
J6 Front Power Window Regulator Motor Assembly RH (GND)
J1
JG3
G90 Junction Connector
G44 ECM (EC)
G14 Front Blower with Fan Motor Sub-Assembly (GND)
G3
K6 Front Power Window Regulator Motor Assembly LH (GND)
K8 Outer Mirror Control ECU Assembly LH (GND)
OK1
K1
W14 No. 2 Room Light Assembly RH (E)
W13 No. 2 Room Light Assembly LH (E)
G6 Outer Mirror Switch Assembly (E2)
G55 Power Tilt Motor (GND)
W8 Visor Assembly LH (E)
W9 Visor Assembly RH (E)
WG1
3B 3C 3A 4C 4A
G32 Shift Lock Control ECU Sub-Assembly (E)
G51 Shift Position Indicator (Console Box Assembly) (E)
G89 Junction Connector
G33 Multiplex Tilt & Telescopic ECU (GND)
G34 Seat Belt Control ECU (PGND)
G2
W-B
W

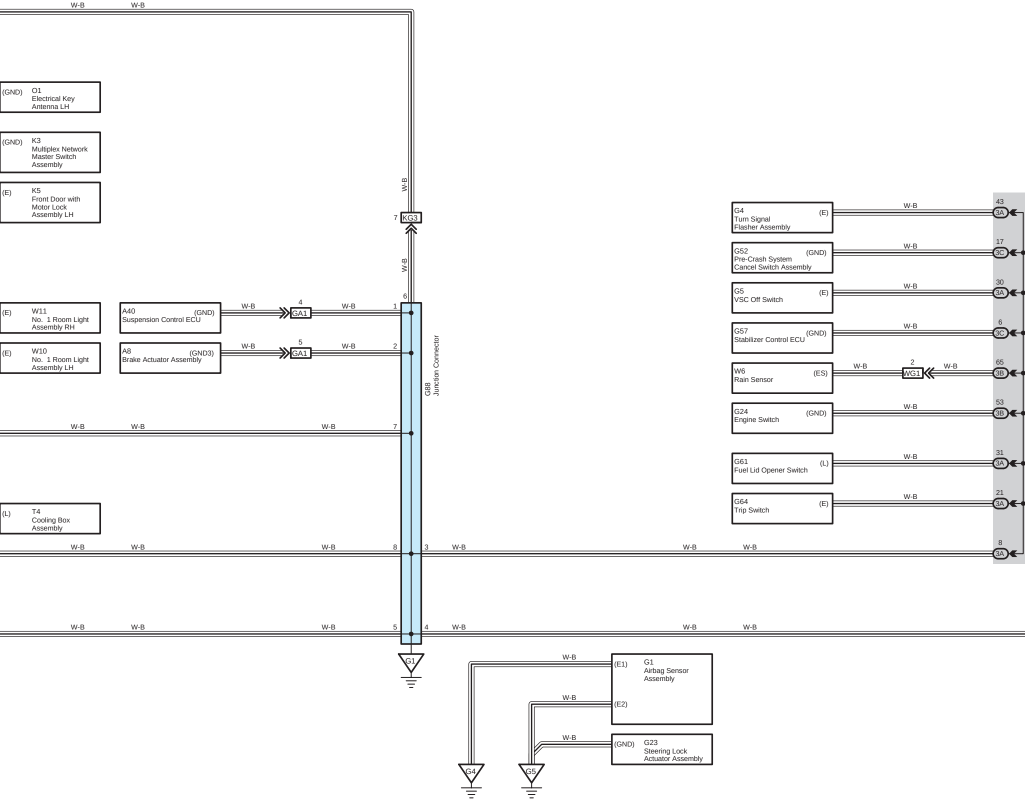
W-B
(GND) O1 Electrical Key Antenna LH
(GND) K3 Multiplex Network Master Switch Assembly
(E) K5 Front Door with Motor Lock Assembly LH
(E) W11 No. 1 Room Light Assembly RH
(E) W10 No. 1 Room Light Assembly LH
(L) T4 Cooling Box Assembly
A40 Suspension Control ECU (GND)
A8 Brake Actuator Assembly (GND3)
4 GA1
5 GA1
7 KG3
G88 Junction Connector
1
2
3
4
5
6
7
8
G1
G4
G5
(E1) G1 Airbag Sensor Assembly
(E2)
(GND) G23 Steering Lock Actuator Assembly
G4 Turn Signal Flasher Assembly (E)
G52 Pre-Crash System Cancel Switch Assembly (GND)
G5 VSC Off Switch (E)
G57 Stabilizer Control ECU (GND)
W6 Rain Sensor (ES)
2 WG1
G24 Engine Switch (GND)
G61 Fuel Lid Opener Switch (L)
G64 Trip Switch (E)
43 3A
17 3C
30 3A
6 3C
65 3B
53 3B
31 3A
21 3A
8 3A

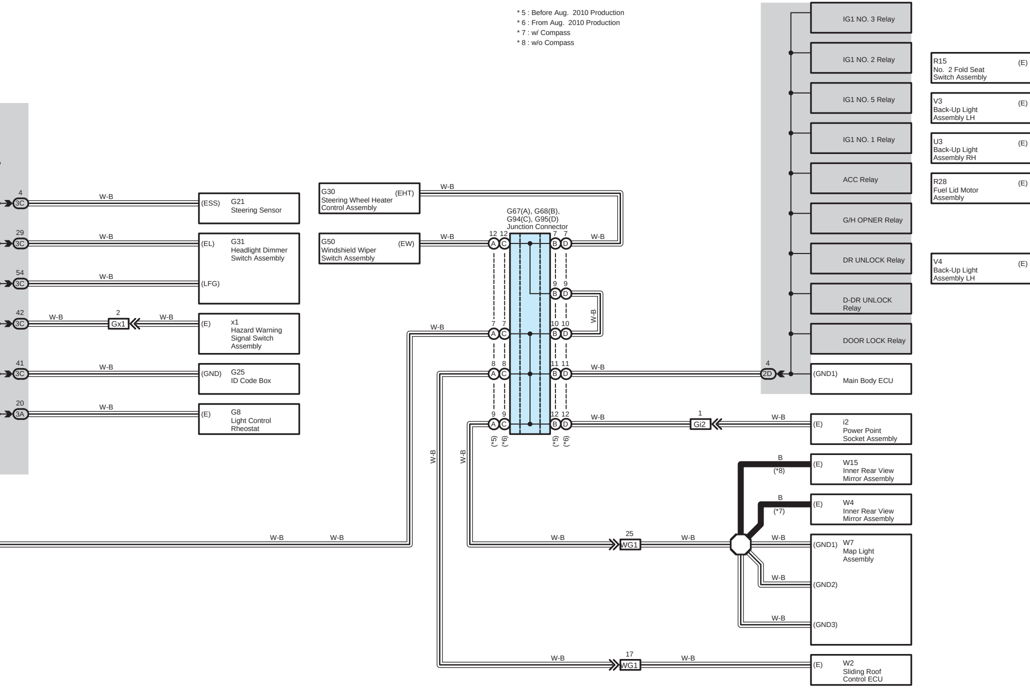
* 5 : Before Aug. 2010 Production
* 6 : From Aug. 2010 Production
* 7 : w/ Compass
* 8 : w/o Compass

IG1 NO. 3 Relay
IG1 NO. 2 Relay
IG1 NO. 5 Relay
IG1 NO. 1 Relay
ACC Relay
G/H OPNER Relay
DR UNLOCK Relay
D-DR UNLOCK Relay
DOOR LOCK Relay
R15 No. 2 Fold Seat Switch Assembly (E)
V3 Back-Up Light Assembly LH (E)
U3 Back-Up Light Assembly RH (E)
R28 Fuel Lid Motor Assembly (E)
V4 Back-Up Light Assembly LH (E)
4 3C W-B (ESS) G21 Steering Sensor
29 3C W-B (EL) G31 Headlight Dimmer Switch Assembly
54 3C W-B (LFG)
42 3C W-B 2 Gx1 W-B (E) x1 Hazard Warning Signal Switch Assembly
41 3C W-B (GND) G25 ID Code Box
20 3A W-B (E) G8 Light Control Rheostat
G30 Steering Wheel Heater Control Assembly (EHT) W-B
G50 Windshield Wiper Switch Assembly (EW) W-B
G67(A), G68(B), G94(C), G95(D) Junction Connector
12 12 A C
7 7 B D
9 9 B D
7 7 A C
10 10 B D
8 8 A C
11 11 B D
9 9 A C
12 12 B D
(*5) (*6) (*5) (*6)
W-B
4 2D (GND1) Main Body ECU
1 Gi2 W-B (E) i2 Power Point Socket Assembly
B (*8) (E) W15 Inner Rear View Mirror Assembly
B (*7) (E) W4 Inner Rear View Mirror Assembly
25 WG1 W-B (GND1) W7 Map Light Assembly
(GND2)
(GND3)
17 WG1 W-B (E) W2 Sliding Roof Control ECU
W-B

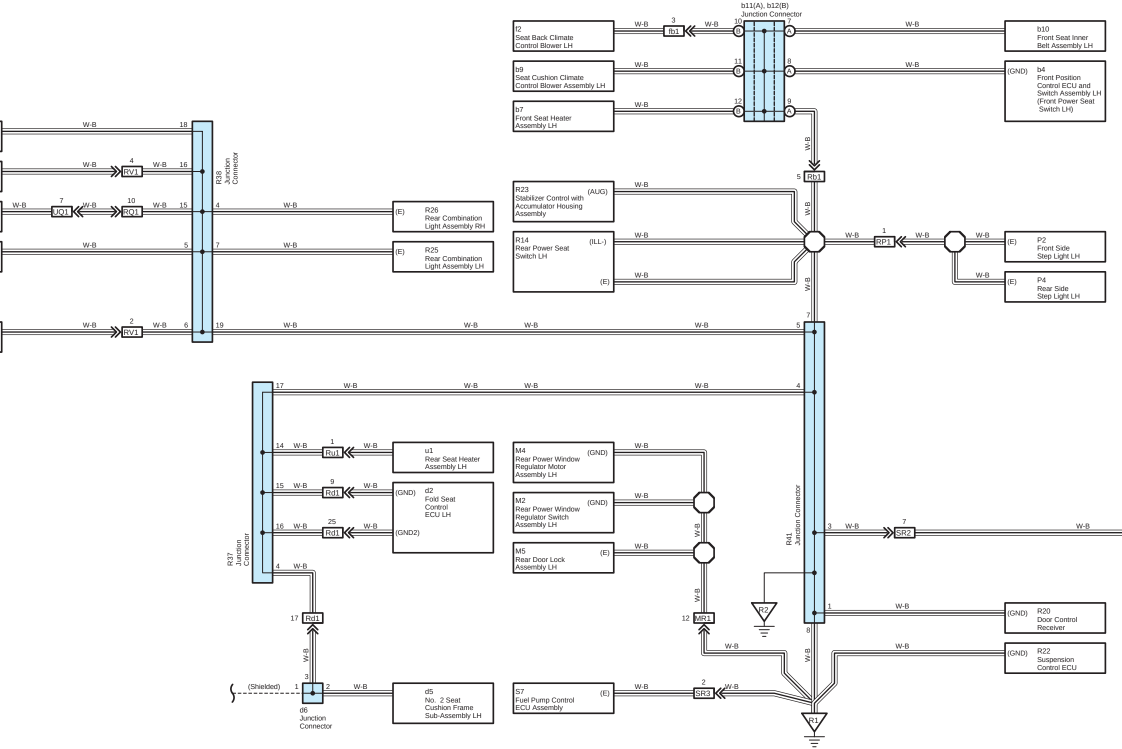
b11(A), b12(B)
Junction Connector
f2
Seat Back Climate
Control Blower LH
b9
Seat Cushion Climate
Control Blower Assembly LH
b7
Front Seat Heater
Assembly LH
b10
Front Seat Inner
Belt Assembly LH
(GND)
b4
Front Position
Control ECU and
Switch Assembly LH
(Front Power Seat
Switch LH)
3
fb1
10
11
12
7
8
9
W-B
5
Rb1
R23
Stabilizer Control with
Accumulator Housing
Assembly
(AUG)
R14
Rear Power Seat
Switch LH
(ILL-)
(E)
1
RP1
(E)
P2
Front Side
Step Light LH
(E)
P4
Rear Side
Step Light LH
R38
Junction
Connector
18
4
RV1
16
7
UQ1
10
RQ1
15
4
(E)
R26
Rear Combination
Light Assembly RH
5
7
(E)
R25
Rear Combination
Light Assembly LH
2
RV1
6
19
7
5
R41
Junction Connector
17
4
14
1
Ru1
u1
Rear Seat Heater
Assembly LH
15
9
Rd1
(GND)
d2
Fold Seat
Control
ECU LH
16
25
Rd1
(GND2)
R37
Junction
Connector
4
17
Rd1
3
(Shielded)
1
2
d6
Junction
Connector
d5
No. 2 Seat
Cushion Frame
Sub-Assembly LH
M4
Rear Power Window
Regulator Motor
Assembly LH
(GND)
M2
Rear Power Window
Regulator Switch
Assembly LH
(GND)
M5
Rear Door Lock
Assembly LH
(E)
12
MR1
3
7
SR2
R2
1
(GND)
R20
Door Control
Receiver
8
(GND)
R22
Suspension
Control ECU
S7
Fuel Pump Control
ECU Assembly
(E)
2
SR3
R1

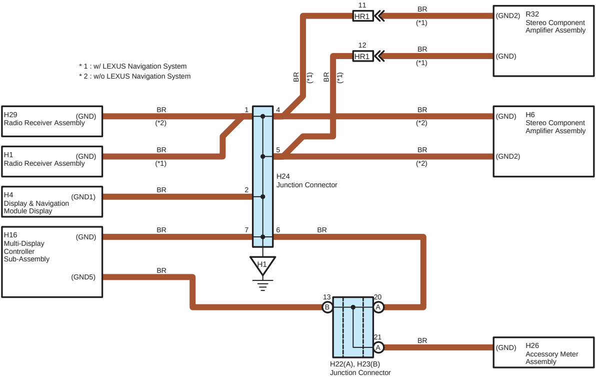

* 1 : w/ LEXUS Navigation System
* 2 : w/o LEXUS Navigation System

11
HR1
BR
(*1)
(GND2)
R32
Stereo Component Amplifier Assembly
12
HR1
BR
(*1)
(GND)
BR
(*1)
BR
(*1)
H29
Radio Receiver Assembly
(GND)
BR
(*2)
1
4
BR
(*2)
(GND)
H6
Stereo Component Amplifier Assembly
H1
Radio Receiver Assembly
(GND)
BR
(*1)
5
BR
(*2)
(GND2)
H24
Junction Connector
H4
Display & Navigation Module Display
(GND1)
BR
2
H16
Multi-Display Controller Sub-Assembly
(GND)
BR
7
6
BR
H1
(GND5)
BR
13
B
20
A
21
A
BR
(GND)
H26
Accessory Meter Assembly
H22(A), H23(B)
Junction Connector

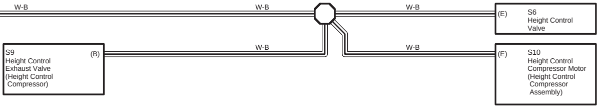

W-B
W-B
W-B
(E)
S6
Height Control Valve
S9
Height Control Exhaust Valve (Height Control Compressor)
(B)
W-B
W-B
(E)
S10
Height Control Compressor Motor (Height Control Compressor Assembly)