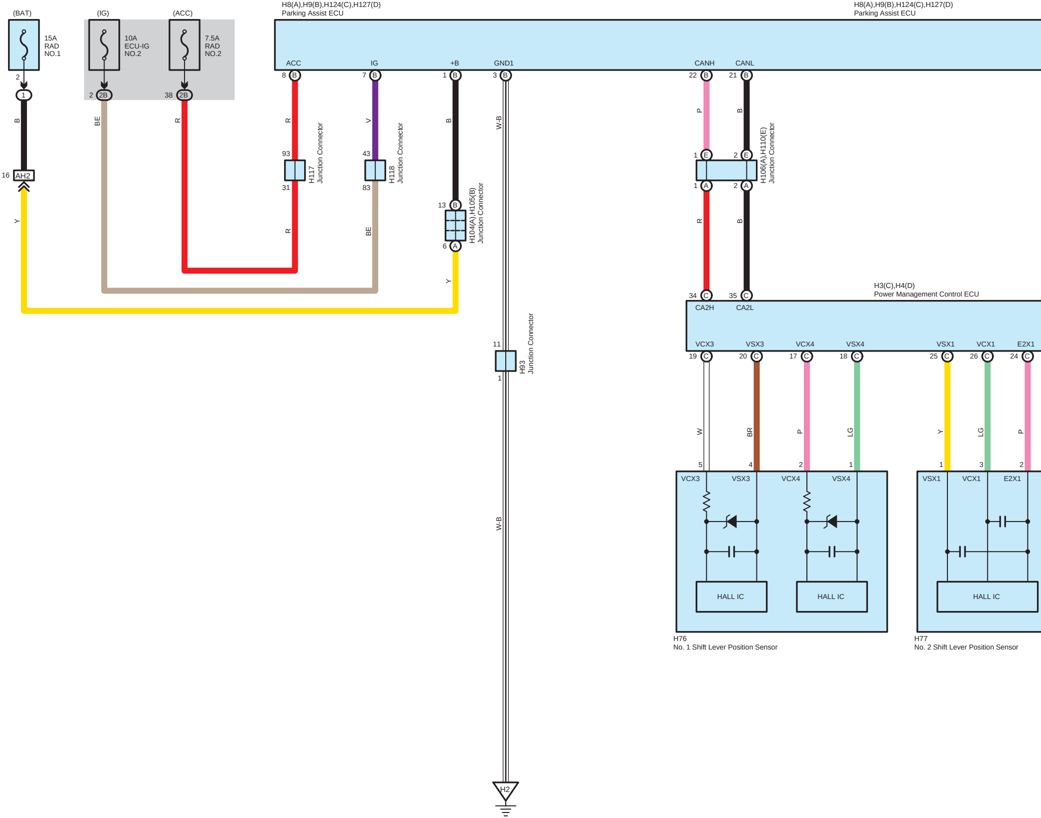
(BAT)
15A
RAD
NO.1
(IG)
10A
ECU-IG
NO.2
(ACC)
7.5A
RAD
NO.2
2
1
2
2B
38
2B
B
BE
R
16
AH2
Y
H8(A),H9(B),H124(C),H127(D)
Parking Assist ECU
ACC
IG
+B
GND1
8
B
7
B
1
B
3
B
R
V
B
W-B
93
31
H117
Junction Connector
43
83
H118
Junction Connector
R
BE
13
B
6
A
H104(A),H105(B)
Junction Connector
Y
11
1
H93
Junction Connector
W-B
H2
H8(A),H9(B),H124(C),H127(D)
Parking Assist ECU
CANH
CANL
22
B
21
B
P
B
1
E
2
E
1
A
2
A
H106(A),H110(E)
Junction Connector
R
B
34
C
35
C
H3(C),H4(D)
Power Management Control ECU
CA2H
CA2L
VCX3
VSX3
VCX4
VSX4
VSX1
VCX1
E2X1
19
C
20
C
17
C
18
C
25
C
26
C
24
C
W
BR
P
LG
Y
LG
P
5
4
2
1
1
3
2
VCX3
VSX3
VCX4
VSX4
HALL IC
HALL IC
H76
No. 1 Shift Lever Position Sensor
VSX1
VCX1
E2X1
HALL IC
H77
No. 2 Shift Lever Position Sensor

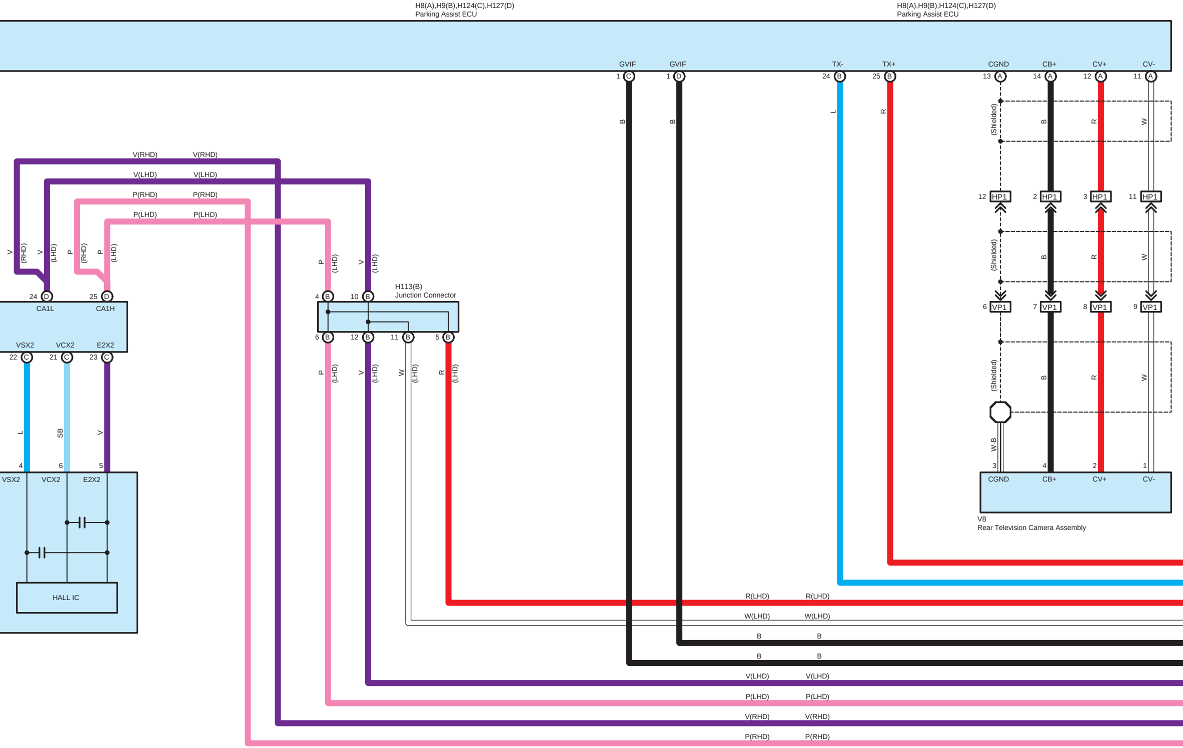
H8(A),H9(B),H124(C),H127(D)
Parking Assist ECU
H8(A),H9(B),H124(C),H127(D)
Parking Assist ECU
GVIF
GVIF
TX-
TX+
CGND
CB+
CV+
CV-
1 C
1 D
24 B
25 B
13 A
14 A
12 A
11 A
B
B
L
R
(Shielded)
B
R
W
12 HP1
2 HP1
3 HP1
11 HP1
(Shielded)
B
R
W
6 VP1
7 VP1
8 VP1
9 VP1
(Shielded)
B
R
W
W-B
3
4
2
1
CGND
CB+
CV+
CV-
V8
Rear Television Camera Assembly
V(RHD)
V(RHD)
V(LHD)
V(LHD)
P(RHD)
P(RHD)
P(LHD)
P(LHD)
V (RHD)
V (LHD)
P (RHD)
P (LHD)
24 D
25 D
CA1L
CA1H
VSX2
VCX2
E2X2
22 C
21 C
23 C
L
SB
V
4
6
5
VSX2
VCX2
E2X2
HALL IC
P (LHD)
V (LHD)
H113(B)
Junction Connector
4 B
10 B
6 B
12 B
11 B
5 B
P (LHD)
V (LHD)
W (LHD)
R (LHD)
R(LHD)
R(LHD)
W(LHD)
W(LHD)
B
B
B
B
V(LHD)
V(LHD)
P(LHD)
P(LHD)
V(RHD)
V(RHD)
P(RHD)
P(RHD)

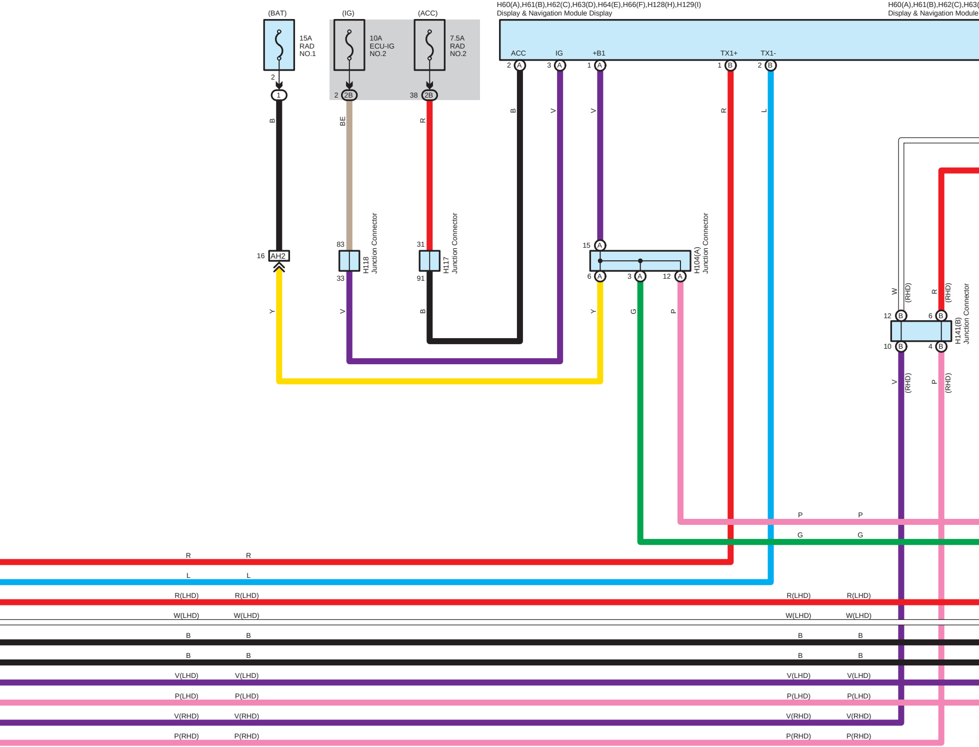
(BAT)
15A
RAD
NO.1
(IG)
10A
ECU-IG
NO.2
(ACC)
7.5A
RAD
NO.2
H60(A),H61(B),H62(C),H63(D),H64(E),H66(F),H128(H),H129(I)
Display & Navigation Module Display
H60(A),H61(B),H62(C),H63(
Display & Navigation Module
ACC
IG
+B1
TX1+
TX1-
2 A
3 A
1 A
1 B
2 B
2
1
2 2B
38 2B
B
BE
R
B
V
V
R
L
16 AH2
83
33
H118
Junction Connector
31
91
H117
Junction Connector
15 A
6 A
3 A
12 A
H104(A)
Junction Connector
Y
V
B
Y
G
P
W
(RHD)
R
(RHD)
12 B
6 B
10 B
4 B
H141(B)
Junction Connector
V
(RHD)
P
(RHD)
P
P
G
G
R
R
L
L
R(LHD)
R(LHD)
W(LHD)
W(LHD)
B
B
B
B
V(LHD)
V(LHD)
P(LHD)
P(LHD)
V(RHD)
V(RHD)
P(RHD)
P(RHD)
R(LHD)
R(LHD)
W(LHD)
W(LHD)
B
B
B
B
V(LHD)
V(LHD)
P(LHD)
P(LHD)
V(RHD)
V(RHD)
P(RHD)
P(RHD)

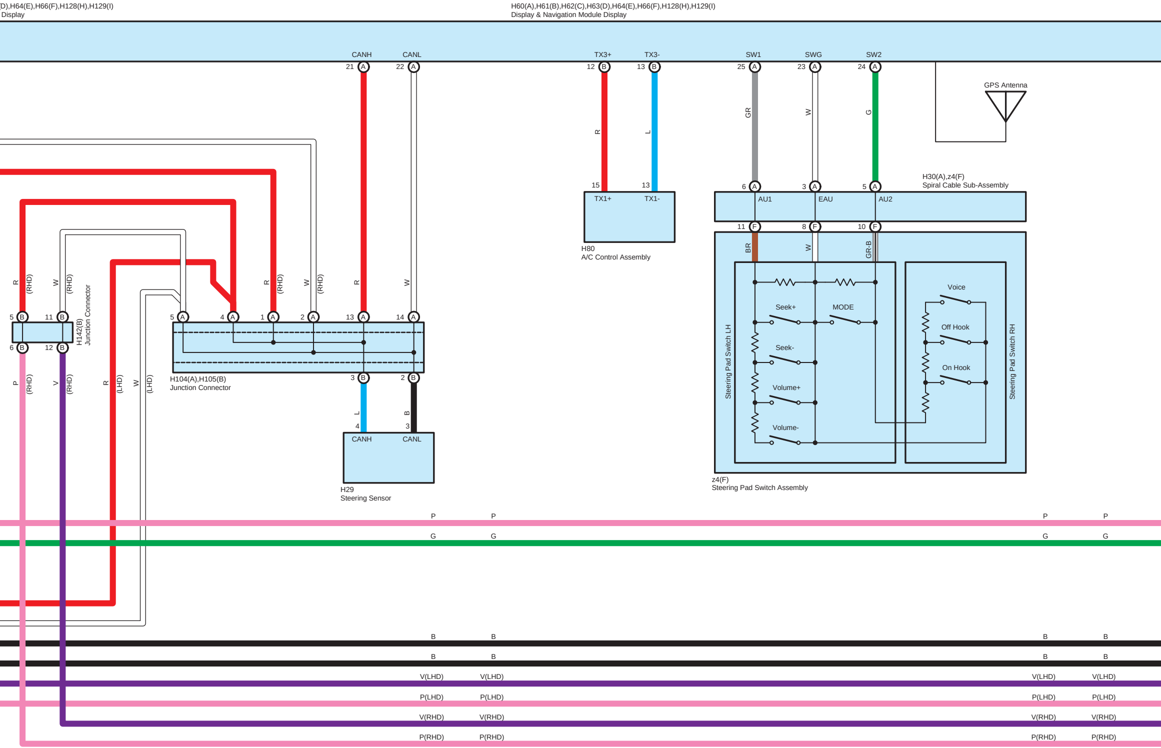
D),H64(E),H66(F),H128(H),H129(I)
Display
H60(A),H61(B),H62(C),H63(D),H64(E),H66(F),H128(H),H129(I)
Display & Navigation Module Display
CANH
CANL
TX3+
TX3-
SW1
SWG
SW2
21 A
22 A
12 B
13 B
25 A
23 A
24 A
GPS Antenna
R
L
GR
W
G
15
13
TX1+
TX1-
H80
A/C Control Assembly
6 A
3 A
5 A
H30(A),z4(F)
Spiral Cable Sub-Assembly
AU1
EAU
AU2
11 F
8 F
10 F
BR
W
GR-B
Seek+
MODE
Seek-
Volume+
Volume-
Voice
Off Hook
On Hook
Steering Pad Switch LH
Steering Pad Switch RH
z4(F)
Steering Pad Switch Assembly
R (RHD)
W (RHD)
R (RHD)
W (RHD)
R
W
5 B
11 B
6 B
12 B
H142(B)
Junction Connector
5 A
4 A
1 A
2 A
13 A
14 A
3 B
2 B
H104(A),H105(B)
Junction Connector
P (RHD)
V (RHD)
R (LHD)
W (LHD)
L
B
4
3
CANH
CANL
H29
Steering Sensor
P
G
B
B
V(LHD)
P(LHD)
V(RHD)
P(RHD)

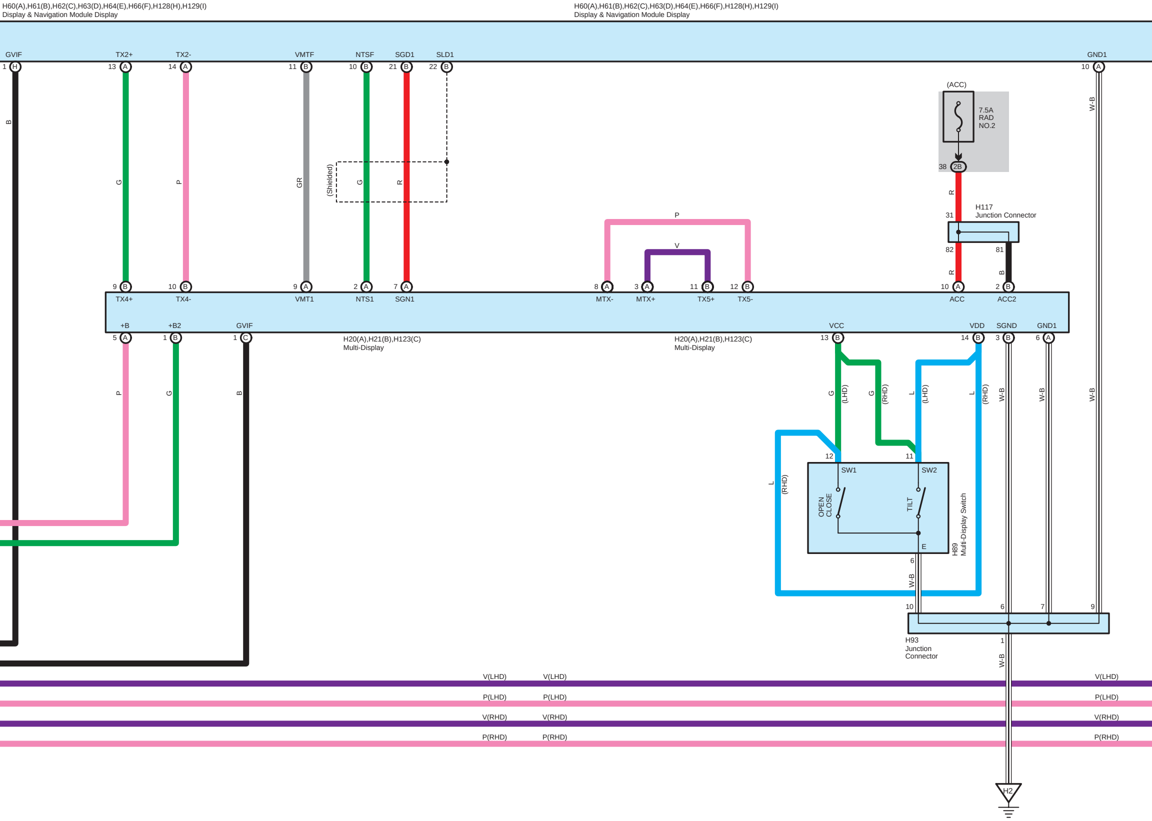
H60(A),H61(B),H62(C),H63(D),H64(E),H66(F),H128(H),H129(I)
Display & Navigation Module Display
H60(A),H61(B),H62(C),H63(D),H64(E),H66(F),H128(H),H129(I)
Display & Navigation Module Display
GVIF
1 H
TX2+
13 A
TX2-
14 A
VMTF
11 B
NTSF
10 B
SGD1
21 B
SLD1
22 B
GND1
10 A
B
G
P
GR
(Shielded)
G
R
W-B
(ACC)
7.5A
RAD
NO.2
38 2B
R
H117
Junction Connector
31
82
81
R
B
P
V
9 B
TX4+
10 B
TX4-
9 A
VMT1
2 A
NTS1
7 A
SGN1
8 A
MTX-
3 A
MTX+
11 B
TX5+
12 B
TX5-
10 A
ACC
2 B
ACC2
+B
5 A
+B2
1 B
GVIF
1 C
H20(A),H21(B),H123(C)
Multi-Display
H20(A),H21(B),H123(C)
Multi-Display
VCC
13 B
VDD
14 B
SGND
3 B
GND1
6 A
P
G
B
G (LHD)
G (RHD)
L (LHD)
L (RHD)
W-B
W-B
W-B
L (RHD)
12
11
SW1
SW2
OPEN
CLOSE
TILT
E
6
H89
Multi-Display Switch
W-B
10
6
7
9
H93
Junction
Connector
1
W-B
V(LHD)
P(LHD)
V(RHD)
P(RHD)
V(LHD)
P(LHD)
V(RHD)
P(RHD)
V(LHD)
P(LHD)
V(RHD)
P(RHD)
H2

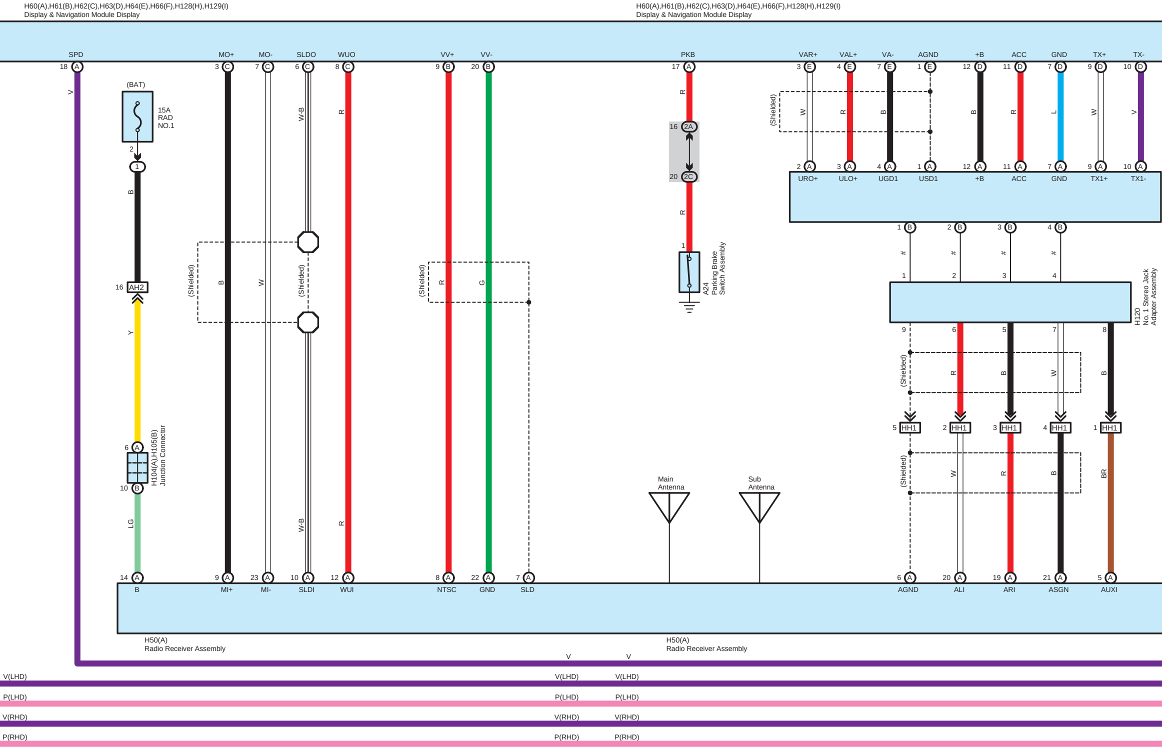
H60(A),H61(B),H62(C),H63(D),H64(E),H66(F),H128(H),H129(I)
Display & Navigation Module Display
H60(A),H61(B),H62(C),H63(D),H64(E),H66(F),H128(H),H129(I)
Display & Navigation Module Display
SPD
18 A
V
MO+
3 C
MO-
7 C
SLDO
6 C
WUO
8 C
VV+
9 B
VV-
20 B
PKB
17 A
VAR+
3 E
VAL+
4 E
VA-
7 E
AGND
1 E
+B
12 D
ACC
11 D
GND
7 D
TX+
9 D
TX-
10 D
(BAT)
15A
RAD
NO.1
2
1
B
16 AH2
Y
6 A
H104(A),H105(B)
Junction Connector
10 B
LG
14 A
B
(Shielded)
B
W
W-B
(Shielded)
R
W-B
R
(Shielded)
R
G
R
16 2A
20 2C
R
1
A24
Parking Brake
Switch Assembly
(Shielded)
W
R
B
B
R
L
W
V
2 A
URO+
3 A
ULO+
4 A
UGD1
1 A
USD1
12 A
+B
11 A
ACC
7 A
GND
9 A
TX1+
10 A
TX1-
1 B
2 B
3 B
4 B
#
#
#
#
1
2
3
4
H120
No. 1 Stereo Jack
Adapter Assembly
9
6
5
7
8
(Shielded)
R
B
W
B
5 HH1
2 HH1
3 HH1
4 HH1
1 HH1
(Shielded)
W
R
B
BR
Main
Antenna
Sub
Antenna
9 A
MI+
23 A
MI-
10 A
SLDI
12 A
WUI
8 A
NTSC
22 A
GND
7 A
SLD
6 A
AGND
20 A
ALI
19 A
ARI
21 A
ASGN
5 A
AUXI
H50(A)
Radio Receiver Assembly
H50(A)
Radio Receiver Assembly
V
V
V(LHD)
V(LHD)
V(LHD)
P(LHD)
P(LHD)
P(LHD)
V(RHD)
V(RHD)
V(RHD)
P(RHD)
P(RHD)
P(RHD)

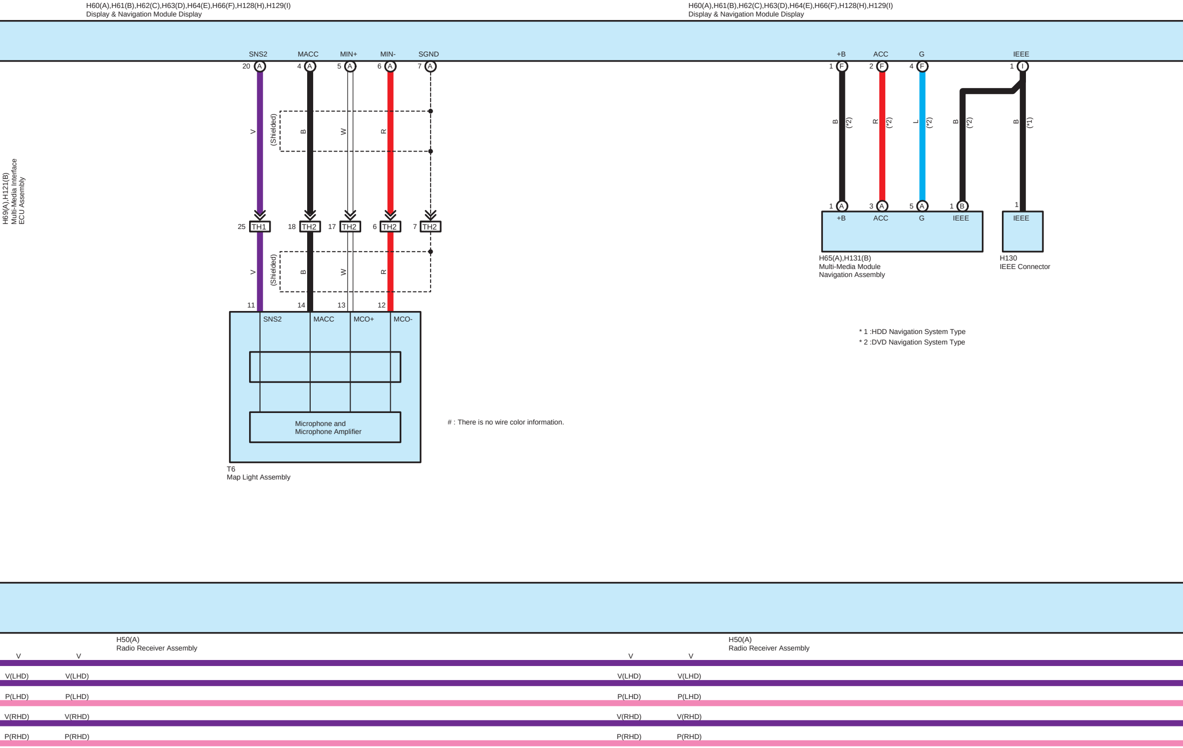
H60(A),H61(B),H62(C),H63(D),H64(E),H66(F),H128(H),H129(I)
Display & Navigation Module Display
SNS2
MACC
MIN+
MIN-
SGND
20 A
4 A
5 A
6 A
7 A
V
(Shielded)
B
W
R
25 TH1
18 TH2
17 TH2
6 TH2
7 TH2
V
(Shielded)
B
W
R
11
14
13
12
SNS2
MACC
MCO+
MCO-
Microphone and
Microphone Amplifier
T6
Map Light Assembly
H69(A),H121(B)
Multi-Media Interface
ECU Assembly
H60(A),H61(B),H62(C),H63(D),H64(E),H66(F),H128(H),H129(I)
Display & Navigation Module Display
+B
ACC
G
IEEE
1 F
2 F
4 F
1 I
B (*2)
R (*2)
L (*2)
B (*2)
B (*1)
1 A
3 A
5 A
1 B
1
+B
ACC
G
IEEE
IEEE
H65(A),H131(B)
Multi-Media Module
Navigation Assembly
H130
IEEE Connector
H50(A)
Radio Receiver Assembly
V
V
V(LHD)
V(LHD)
P(LHD)
P(LHD)
V(RHD)
V(RHD)
P(RHD)
P(RHD)
H50(A)
Radio Receiver Assembly
V
V
V(LHD)
V(LHD)
P(LHD)
P(LHD)
V(RHD)
V(RHD)
P(RHD)
P(RHD)

* 1 :HDD Navigation System Type
* 2 :DVD Navigation System Type

: There is no wire color information.

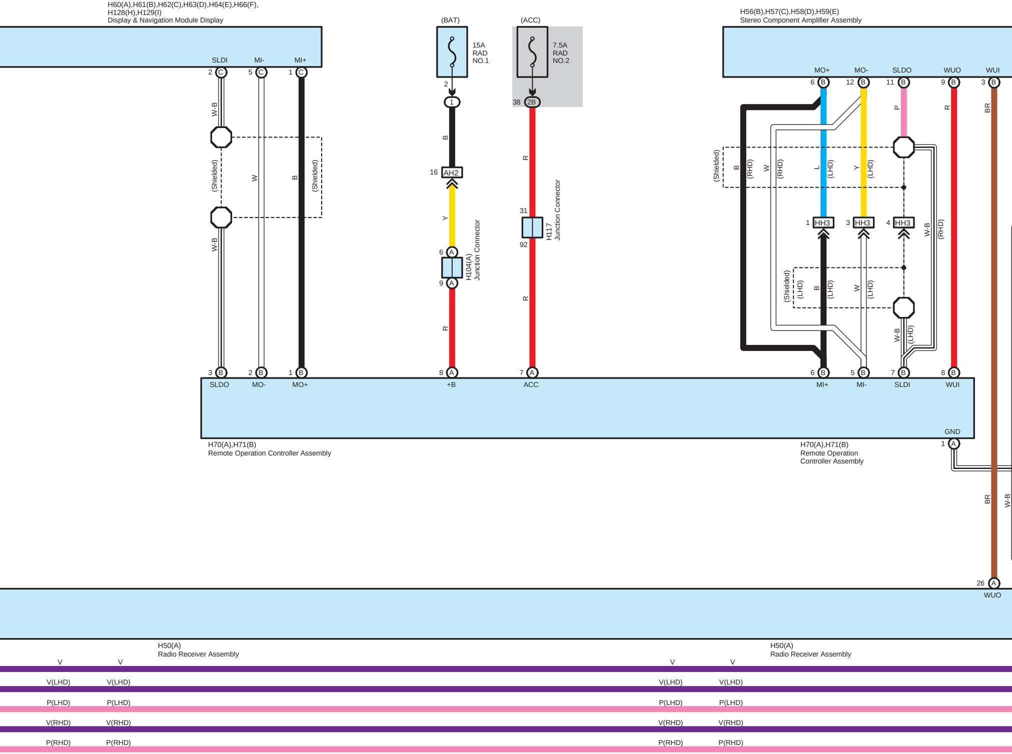
H60(A),H61(B),H62(C),H63(D),H64(E),H66(F),
H128(H),H129(I)
Display & Navigation Module Display
SLDI
MI-
MI+
2 C
5 C
1 C
W-B
(Shielded)
W
B
(Shielded)
W-B
3 B
2 B
1 B
SLDO
MO-
MO+
(BAT)
15A
RAD
NO.1
2
1
B
16 AH2
Y
6 A
H104(A)
Junction Connector
9 A
R
8 A
+B
(ACC)
7.5A
RAD
NO.2
38 2B
R
31
H117
Junction Connector
92
R
7 A
ACC
H56(B),H57(C),H58(D),H59(E)
Stereo Component Amplifier Assembly
MO+
MO-
SLDO
WUO
WUI
6 B
12 B
11 B
9 B
3 B
P
R
BR
(Shielded)
B
(RHD)
W
(RHD)
L
(LHD)
Y
(LHD)
1 HH3
3 HH3
4 HH3
W-B
(RHD)
(Shielded)
(LHD)
B
(LHD)
W
(LHD)
W-B
(LHD)
6 B
5 B
7 B
8 B
MI+
MI-
SLDI
WUI
GND
1 A
H70(A),H71(B)
Remote Operation Controller Assembly
H70(A),H71(B)
Remote Operation
Controller Assembly
BR
W-B
26 A
WUO
H50(A)
Radio Receiver Assembly
H50(A)
Radio Receiver Assembly
V
V
V(LHD)
V(LHD)
P(LHD)
P(LHD)
V(RHD)
V(RHD)
P(RHD)
P(RHD)
V
V
V(LHD)
V(LHD)
P(LHD)
P(LHD)
V(RHD)
V(RHD)
P(RHD)
P(RHD)

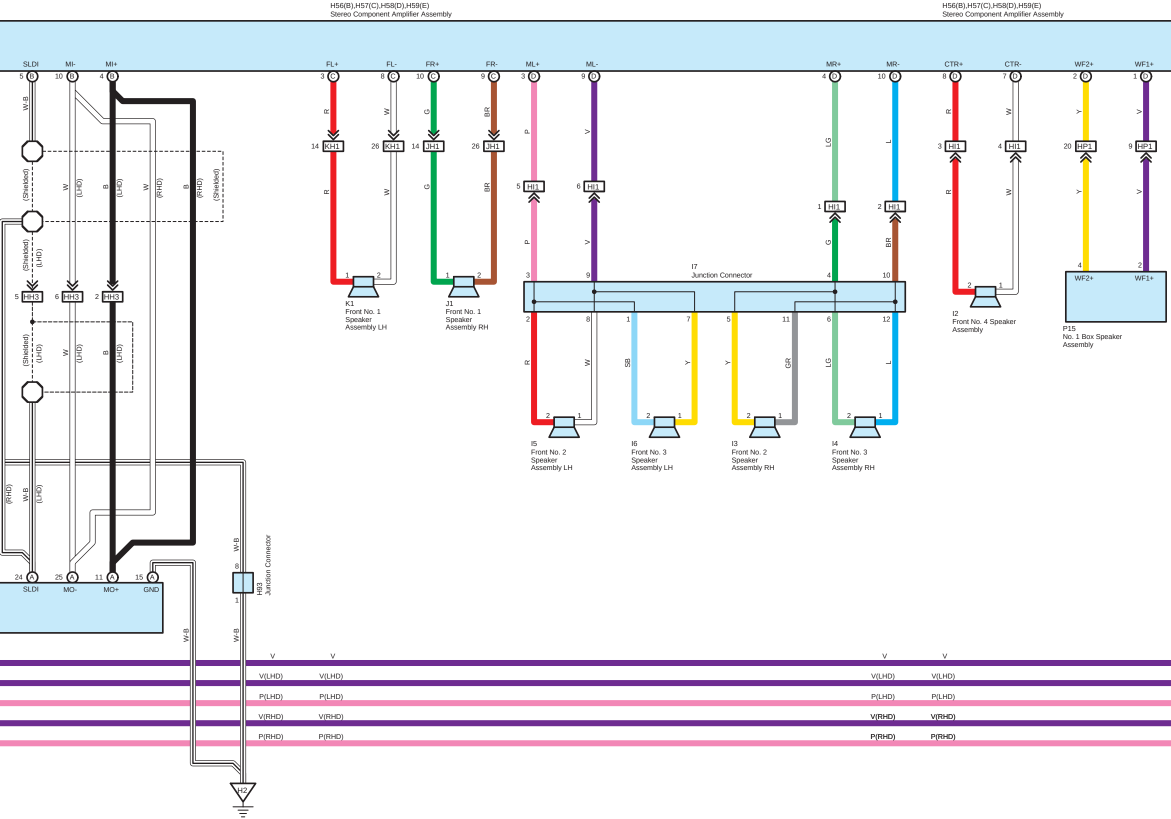
H56(B),H57(C),H58(D),H59(E)
Stereo Component Amplifier Assembly
H56(B),H57(C),H58(D),H59(E)
Stereo Component Amplifier Assembly
SLDI
MI-
MI+
FL+
FL-
FR+
FR-
ML+
ML-
MR+
MR-
CTR+
CTR-
WF2+
WF1+
5 B
10 B
4 B
3 C
8 C
10 C
9 C
3 D
9 D
4 D
10 D
8 D
7 D
2 D
1 D
W-B
(Shielded)
W
(LHD)
B
(LHD)
W
(RHD)
B
(RHD)
(Shielded)
(Shielded)
(LHD)
5 HH3
6 HH3
2 HH3
(Shielded)
(LHD)
W
(LHD)
B
(LHD)
(RHD)
W-B
(LHD)
R
W
G
BR
14 KH1
26 KH1
14 JH1
26 JH1
R
W
G
BR
1
2
1
2
K1
Front No. 1
Speaker
Assembly LH
J1
Front No. 1
Speaker
Assembly RH
P
V
5 HI1
6 HI1
P
V
LG
L
1 HI1
2 HI1
G
BR
I7
Junction Connector
3
9
4
10
2
8
1
7
5
11
6
12
R
W
SB
Y
Y
GR
LG
L
2
1
2
1
2
1
2
1
I5
Front No. 2
Speaker
Assembly LH
I6
Front No. 3
Speaker
Assembly LH
I3
Front No. 2
Speaker
Assembly RH
I4
Front No. 3
Speaker
Assembly RH
R
W
3 HI1
4 HI1
R
W
2
1
I2
Front No. 4 Speaker
Assembly
Y
V
20 HP1
9 HP1
Y
V
4
2
WF2+
WF1+
P15
No. 1 Box Speaker
Assembly
24 A
25 A
11 A
15 A
SLDI
MO-
MO+
GND
W-B
8
H93
Junction Connector
1
W-B
W-B
V
V
V
V
V(LHD)
V(LHD)
V(LHD)
V(LHD)
P(LHD)
P(LHD)
P(LHD)
P(LHD)
V(RHD)
V(RHD)
V(RHD)
V(RHD)
P(RHD)
P(RHD)
P(RHD)
P(RHD)
H2

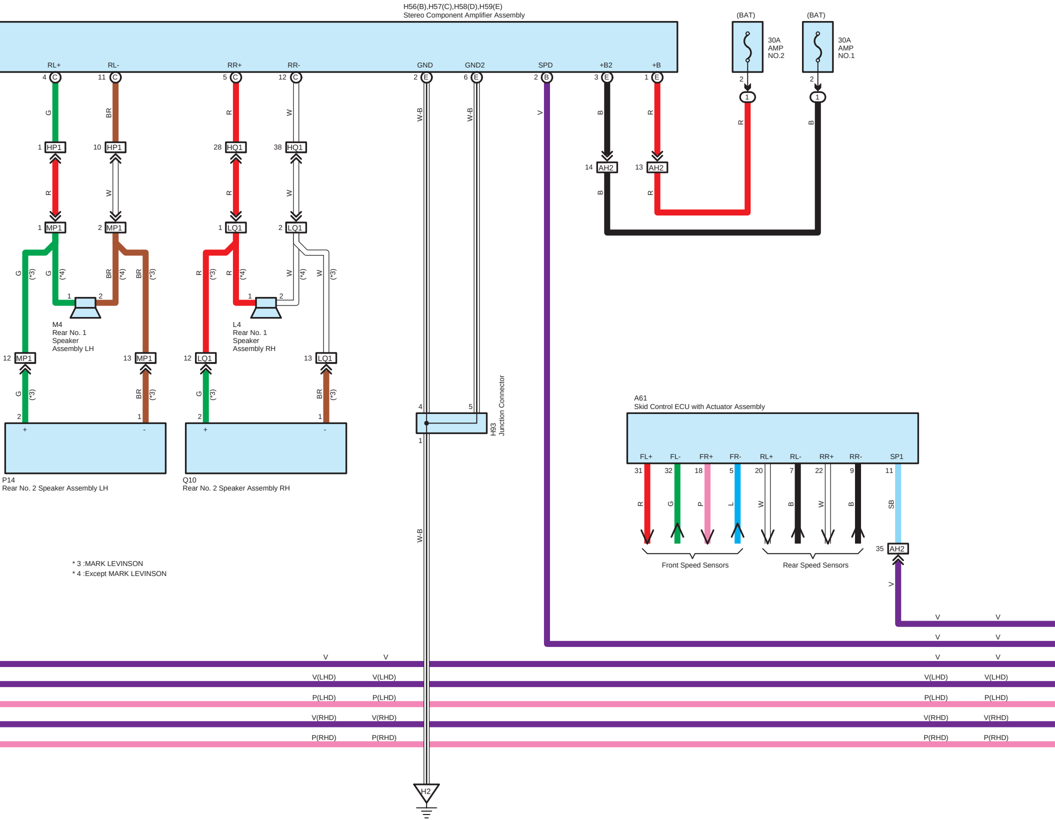
H56(B),H57(C),H58(D),H59(E)
Stereo Component Amplifier Assembly
RL+
RL-
RR+
RR-
GND
GND2
SPD
+B2
+B
(BAT)
30A
AMP
NO.2
(BAT)
30A
AMP
NO.1
HP1
HQ1
MP1
LQ1
AH2
M4
Rear No. 1
Speaker
Assembly LH
L4
Rear No. 1
Speaker
Assembly RH
P14
Rear No. 2 Speaker Assembly LH
Q10
Rear No. 2 Speaker Assembly RH
H93
Junction Connector
A61
Skid Control ECU with Actuator Assembly
FL+
FL-
FR+
FR-
RL+
RL-
RR+
RR-
SP1
Front Speed Sensors
Rear Speed Sensors
* 3 :MARK LEVINSON
* 4 :Except MARK LEVINSON
V(LHD)
P(LHD)
V(RHD)
P(RHD)
W-B
H2

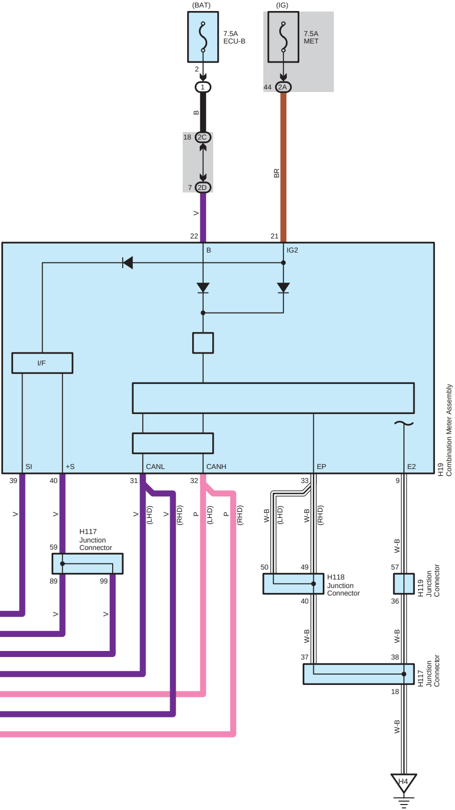
(BAT)
7.5A
ECU-B
(IG)
7.5A
MET
2
1
B
18
2C
7
2D
V
44
2A
BR
22
21
B
IG2
I/F
SI
+S
CANL
CANH
EP
E2
H19
Combination Meter Assembly
39
40
31
32
33
9
V
V
V
(LHD)
V
(RHD)
P
(LHD)
P
(RHD)
W-B
(LHD)
W-B
(RHD)
W-B
H117
Junction
Connector
59
89
99
V
V
50
49
H118
Junction
Connector
40
57
36
H119
Junction
Connector
W-B
W-B
37
38
H117
Junction
Connector
18
W-B
H4